NOTES:

1. MATERIALS AND FINISHES(IN MICRO-INCHES):

BODY	= ZINC ALLOY DIECAST, MATTE TIN PLATED
CONTACT	= BERYLLIUM COPPER, GOLD PLATED
CAP	= BRASS, NICKEL PLATING
INSULATOR	= PTFE, COLOR: NATURAL
O-RING	= HYDROGENATED NITRILE , COLOR: GREEN (CAP)
O-RING	= SILICNE RUBBER , COLOR: RED (INTERFACE)
HOUSING	= PPE+PS, UNFILLED, COLOR & KEYING PER AMPHENOL SPEC. FAKRA-KEY-JACK (REFER TO TABLE BELOW FOR KEY CODE)
FERRULE	= COPPER, NICKEL PLATED
HST	= POLYOLEFIN, ADHESIVE-LINED

2. ELECTRICAL:

A. IMPEDANCE:	50 OHM (NOMINAL)
B. FREQUENCY RANGE:	DC - 3.0 GHz
C. VSWR(RETURN LOSS): (MATED PAIR)	1.200 (-20.8 dB), MAX.(DC-200 MHz)
	1.400 (-15.6 dB), MAX.(200 MHz-2.0 GHz)
	1.500 (-13.9 dB), MAX.(2.0-3.0 GHz)
D. D.W.V.:	800 VRMS, MIN.

3. MECHANICAL:

A. DURABILITY:	100 CYCLES MIN.
B. TEMPERATURE RANGE:	-40° C TO 85° C
C. ENVIRONMENTAL SEAL:	IP67 (WHEN MATED)

4. ALL DIMENSIONS MECHANICAL & ELECTRICAL DESIGN COMPLY WITH DIN 72594-1 AND USCAR-18 SPEC.

5. CABLE ASSEMBLY INSTRUCTIONS PER 349-50883

CONFIGURATION CONTROL:
NO CHANGES PERMITTED TO DRAWING WITHOUT PPAP QUALIFIED CUSTOMER APPROVAL

REVISIONS				
REV	DESCRIPTION	DATE	ECN	BY
A	RELEASE TO MFG.	22-Nov-23	16827	RD

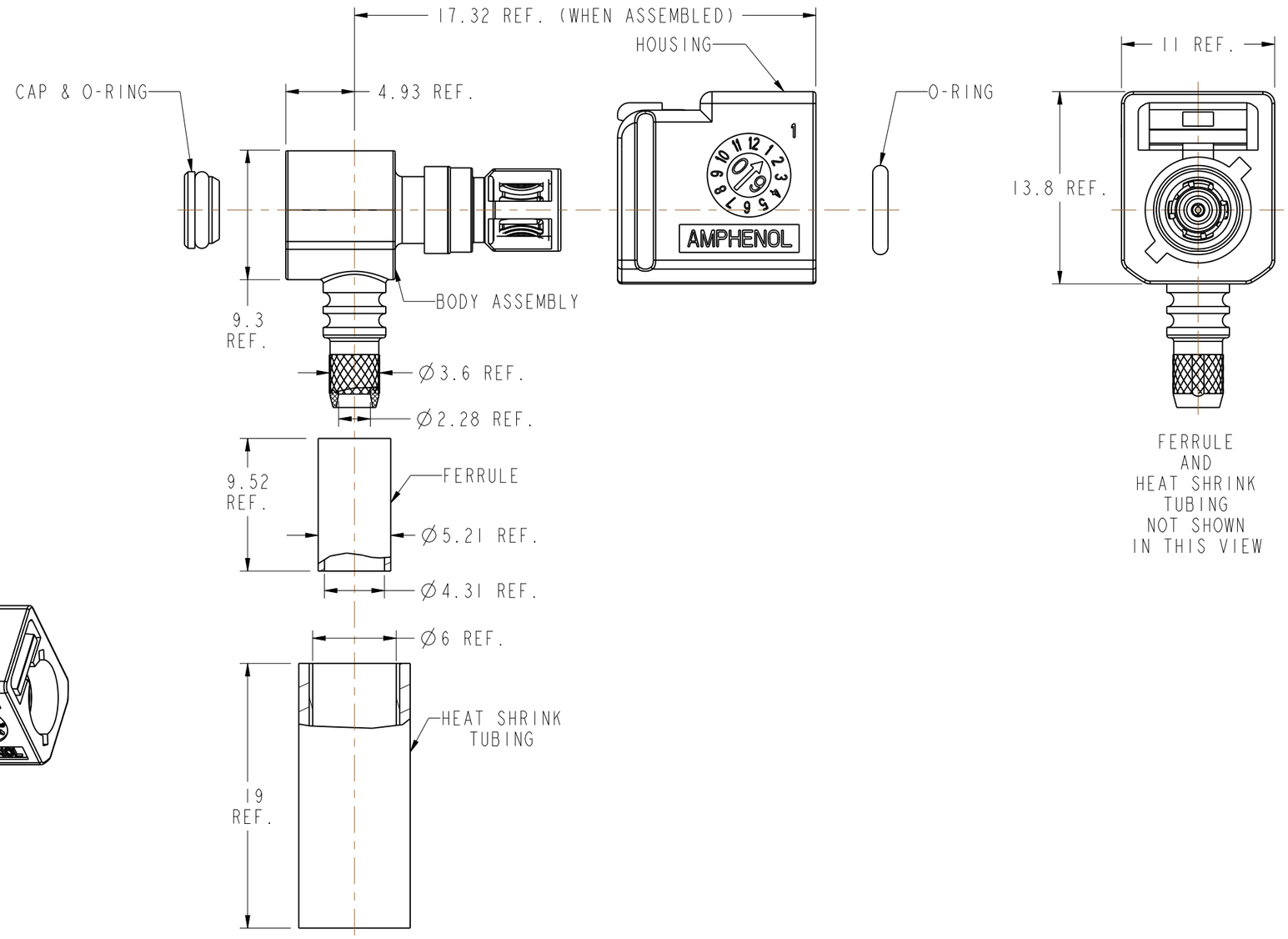

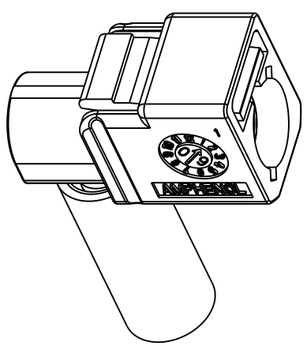

CODING	DRAWING NO.	COLOR	RAL NO.
A	3FA1ENARJ-C30ER	JET BLACK	9005
B	3FA1ENBRJ-C30ER	CREAM WHITE	9001
C	3FA1ENCRJ-C30ER	SIGNAL BLUE	5005
D	3FA1ENDRJ-C30ER	CLARET VIOLET	4004
E	3FA1ENERJ-C30ER	LEAF GREEN	6002
F	3FA1ENFRJ-C30ER	NUT BROWN	8011
G	3FA1ENGRJ-C30ER	BLUE GREY	7031
H	3FA1ENHRJ-C30ER	HEATHER VIOLET	4003
I	3FA1ENIRJ-C30ER	BEIGE	1001
K	3FA1ENKRJ-C30ER	CURRY	1027
L	3FA1ENLRJ-C30ER	CARMINE RED	3002
M	3FA1ENMRJ-C30ER	PASTEL ORANGE	2003
N	3FA1ENNRJ-C30ER	PASTEL GREEN	6019
Z	3FA1ENZRJ-C30ER	WATER BLUE	5021

CUSTOMER OUTLINE DRAWING

ALL OTHER SHEETS ARE FOR INTERNAL USE ONLY

NOTICE: These drawings, specifications, or other data (1) are, and remain the property of Amphenol corp. (2) must be returned upon request; and (3) are confidential and not to be disclosed to any person other than those to whom they are given by Amphenol Corp. The furnishing of these drawings, specifications, or other data by Amphenol Corp., or to any other person to anyone for any purpose is not to be regarded by implication or otherwise in any manner licensing, granting rights to permitting such holder or any other person to manufacture, use or sell any product, process or design, patented or otherwise, that may in any way be related to or disclosed by said drawings, specifications, or other data.

THIRD ANGLE PROJ.

REFERENCE

EAR# 9721

UNLESS OTHERWISE SPECIFIED
DIMENSIONS ARE METRIC [INCHES] AND TOLERANCES ARE:

<0.5mm = ±0.05mm	[<0.020 = ±0.002]
0.5 - 6mm = ±0.1mm	[>0.020 - 0.236 = ±0.004]
>6.00 - 30mm = ±0.2mm	[>0.236 - 1.181 = ±0.008]
>30.00 - 120mm = ±0.3mm	[>1.181 - 4.725 = ±0.012]

ANGLES = ±1°

MATERIAL

ENGR.1 R.DEMARCHIS | ENGR.2 J.YE | DATE 07-Apr-20

TITLE
FAKRA R/A JACK,GEN 3.5, CABLE GROUP C30, IP67 SEALED

SHEET NO. 2 OF 2 | SCALE: 3.0:1.0

Amphenol RF

SIZE		REV
B	DRAWING NO. 3FA1ENXRJ-C30ER	A
	ITEM NO. 3FA1ENXRJ-C30ER	
	PART NO. 3FA1ENXRJ-C30ER	