THIS COPY IS PROVIDED ON A RESTRICTED BASIS AND IS NOT TO BE USED IN ANY WAY DETRIMENTAL TO THE INTERESTS OF PANDUIT CORP.

D

PANDUIT PART NUMBER	WEIGHT
FOV452X2	0.24 LB/EACH (109g/EACH)

H

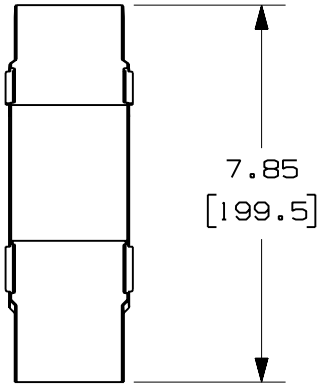

I NOTES:

1. SEE CURRENT CATALOG FOR ADDITIONAL PART SUFFIXES TO INDICATE COLOR AND/OR PACKAGE QUANTITY.
2. THE FIBER-DUCT 2x2 AND FIBERRUNNER 2x2 OUTSIDE VERTICAL 45° ANGLE FITTING IS DESIGNED WITH A MINIMUM 2" (50.8) BEND RADIUS TO PROTECT FIBER OPTIC CABLES.
3. DIMENSIONS IN PARENTHESES ARE IN METRIC.

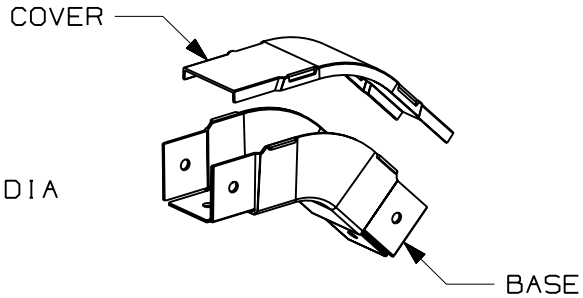

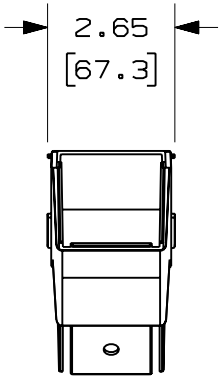

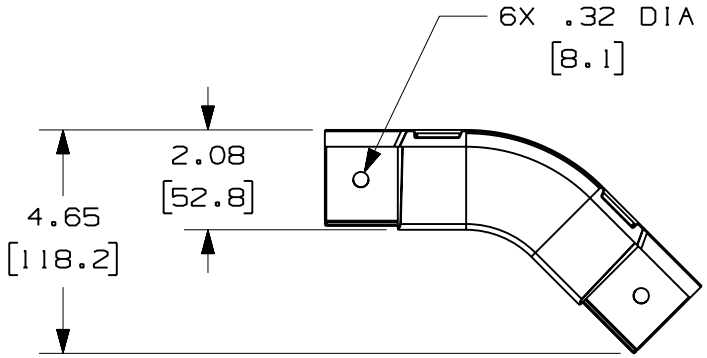

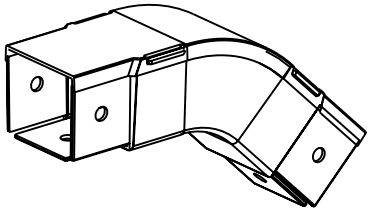

ENG. REF.: D35245BZ_DC_FOV452X2_05.prt

CAD FILENAME/LAYERS E FOV452X2.pdf

PANDUIT CORP TINLEY PARK, ILLINOIS

FIBER-DUCT 2x2 AND FIBERRUNNER 2x2 OUTSIDE VERTICAL 45° ANGLE FITTING (FOV452X2)

F CUSTOMER DRAWING

UNLESS OTHERWISE SPECIFIED, DIMENSIONAL TOLERANCES ARE:
(.X) ± (.XXX) ±
(.XX) ±.03 (.8) ANGLES ±

UNLESS OTHERWISE SPECIFIED, ALL DIMENSIONS ARE GIVEN IN INCHES, THIRD ANGLE PROJECTION.

DRAWN BY TPC | MAT'L: ABS | SCALE NONE

DATE 1-15-97 | DRAWING NO. 35245-26 | DWG A

CHK'D CEF G | SIZE

REV	DATE	BY	CHK	DESCRIPTION	ECN	-	R	CUST	SUP	GMBH
-	--------	---	---	I. REVISED GENERAL NOTES. H. REVISED PART WEIGHT.	--------		--	--		
-	--------	---	---	G. REVISED MATERIAL. F. REVISED DRAWING TITLE.	--------		--	--		
5	12-15-06	MSO	RN	E. REVISED CAD FILENAME. D. REVISED AND REDRAWN.	34245-26		RN	RN		