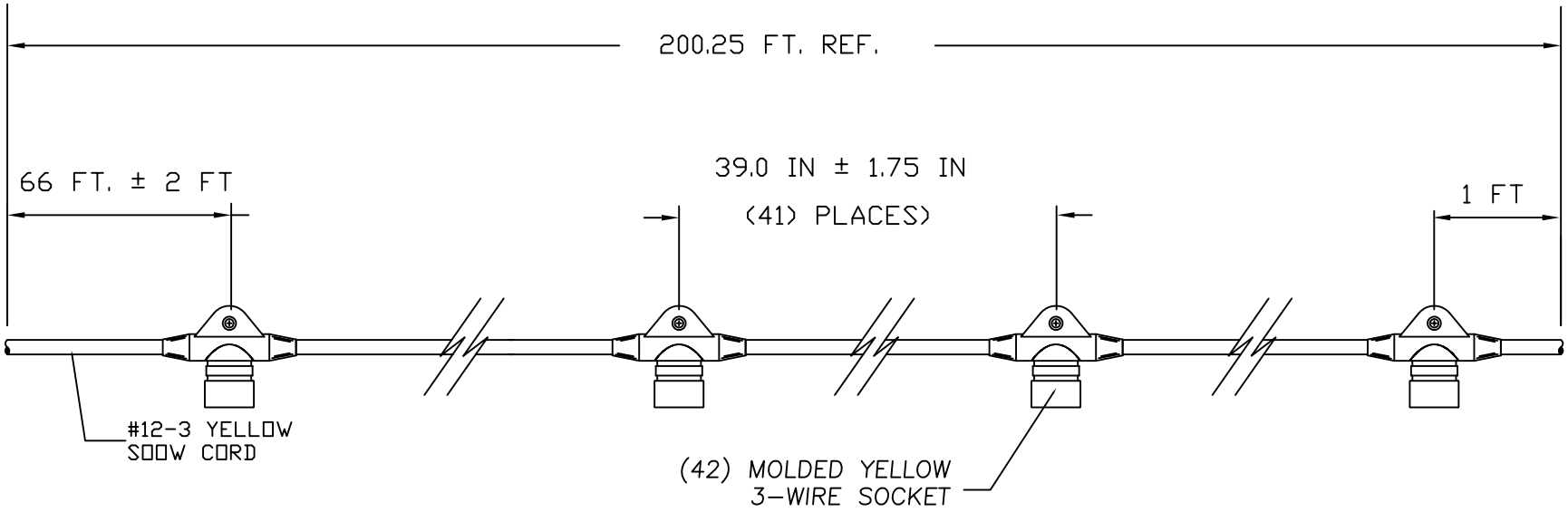

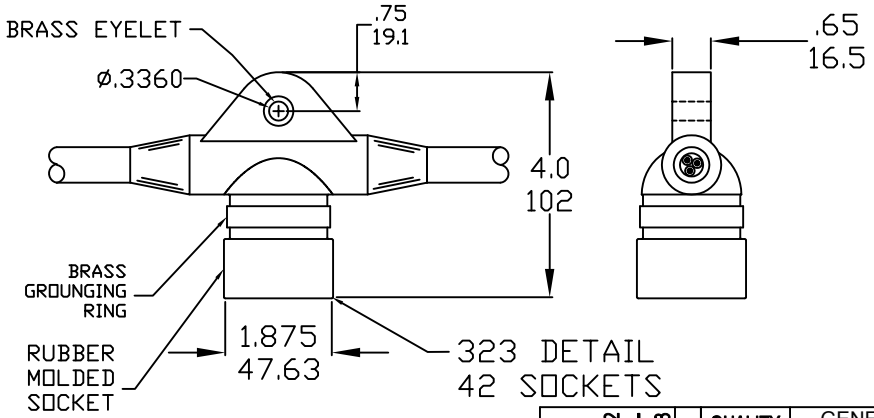

RELELASE DRAWING EC NO: WNA2010-0739 DRWN: TVICKERS 2010/06/02 CH'KD: HK — APPR: DTITUS 2010/09/03	DESCRIPTION	QUALITY SYMBOLS ▼=0 (C)=0	GENERAL TOLERANCES (UNLESS SPECIFIED) mm / INCH 4 PLACES ±--- ±--- 3 PLACES ±--- ±.005 2 PLACES ±0.13 ±.010 1 PLACE ±0.25 ±.020 ANGULAR ±.5° DRAFT WHERE APPLICABLE MUST REMAIN WITHIN DIMENSIONS	DIMENSION STYLE IN/MM DRAWN BY TVICKERS DATE 2010/06/02 CHECKED BY HK DATE 2010/06/02 APPROVED BY DTITUS DATE 2010/09/02 MATERIAL NO. 1301060160	SCALE NTS DESIGN UNITS INCH THIRD ANGLE PROJECTION TITLE STRINGLIGHT 200.25 FT. (42) 323@39 IN. CENTERS 66 FT. LEAD & 1 FT TAIL molex MOLEX INCORPORATED DOCUMENT NO. SD-130106-017 SHEET NO. 1 OF 1	
A	REV			SIZE A	THIS DRAWING CONTAINS INFORMATION THAT IS PROPRIETARY TO MOLEX INCORPORATED AND SHOULD NOT BE USED WITHOUT WRITTEN PERMISSION		