PART NAME	CHAMPION SERIES	PART No.	CS-11202 TO CS-11216

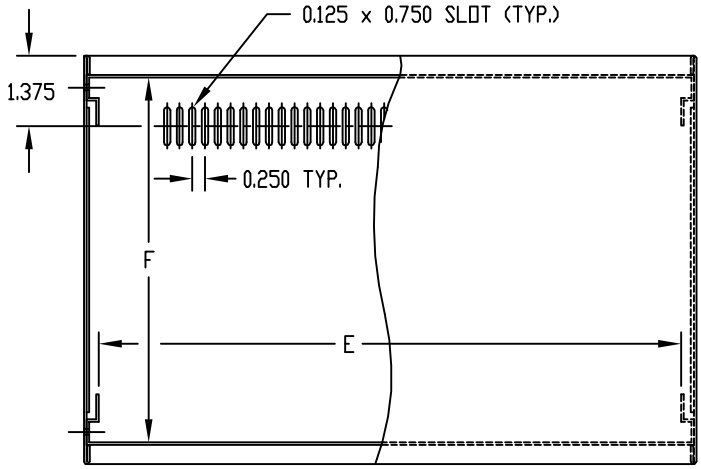

TOP VIEW

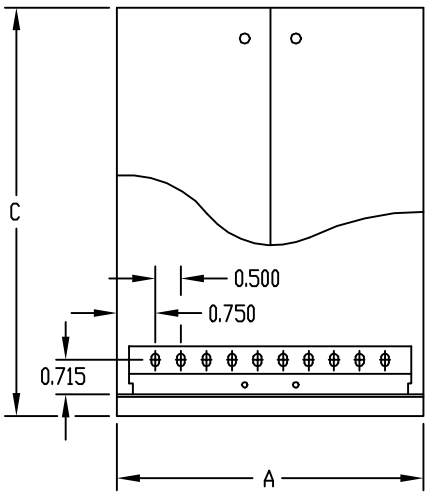

SIDE VIEW

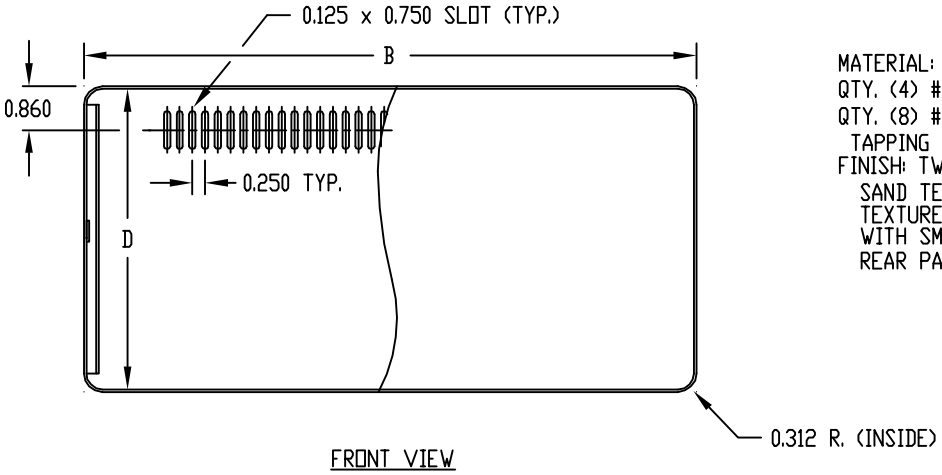

FRONT VIEW

MATERIAL: 0.050 THK. ALUMINUM
QTY. (4) #F-3581 RUBBER FEET
QTY. (8) #6 x 1/4 TRUSS HEAD TAPPING SCREW.
FINISH: TWO COLOR COMBINATIONS SAND TEXTURED OR BLACK TEXTURED TOP & BOTTOM, BOTH WITH SMOOTH WHITE FRONT & REAR PANELS.

PART No.	HEIGHT A	WIDTH B	DEPTH C	CLEAR INSIDE HEIGHT D	CLEAR INSIDE WIDTH E	CLEAR INSIDE DEPTH F
CS-11202	4.000	6.000	6.000	3.875	5.375	5.141
CS-11204	4.000	9.000	8.000	3.875	8.375	7.141
CS-11206	4.000	12.000	8.000	3.875	11.375	7.141
CS-11208	6.000	9.000	8.000	5.875	8.375	7.141
CS-11210	6.000	12.000	8.000	5.875	11.375	7.141
CS-11212	6.000	12.000	10.000	5.875	11.375	9.141
CS-11214	8.000	9.000	8.000	7.875	8.375	7.141
CS-11216	8.000	12.000	10.000	7.875	11.375	9.141