THIS COPY IS PROVIDED ON A RESTRICTED BASIS AND IS NOT TO BE USED IN ANY WAY DETRIMENTAL TO THE INTERESTS OF PANDUIT CORP.

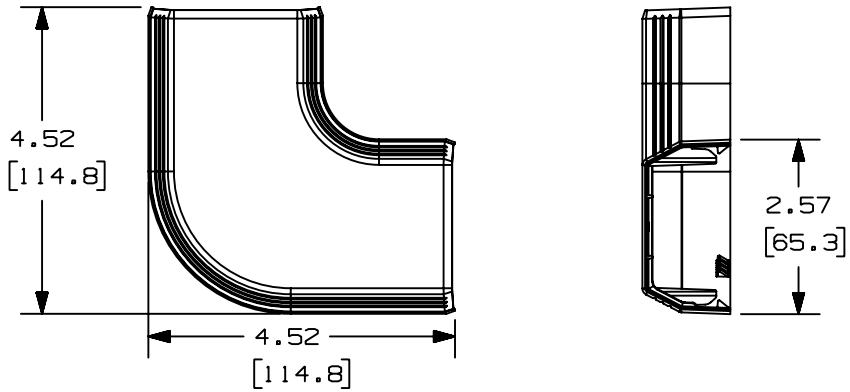

PANDUIT P/N	WEIGHT
T45RA	2.07 LB/10 PCS 940 g/10 PCS

NOTES:

1. SEE CURRENT CATALOG FOR ADDITIONAL PART SUFFIXES TO INDICATE COLOR AND OR PACKAGE QUANTITY.
2. THIS PRODUCT IS INTENDED TO BE USED TO JOIN SECTIONS OF RACEWAY TO MAKE HORIZONTAL 90° (RIGHT ANGLES).
3. DIMENSIONS IN PARENTHESIS ARE IN METRIC.

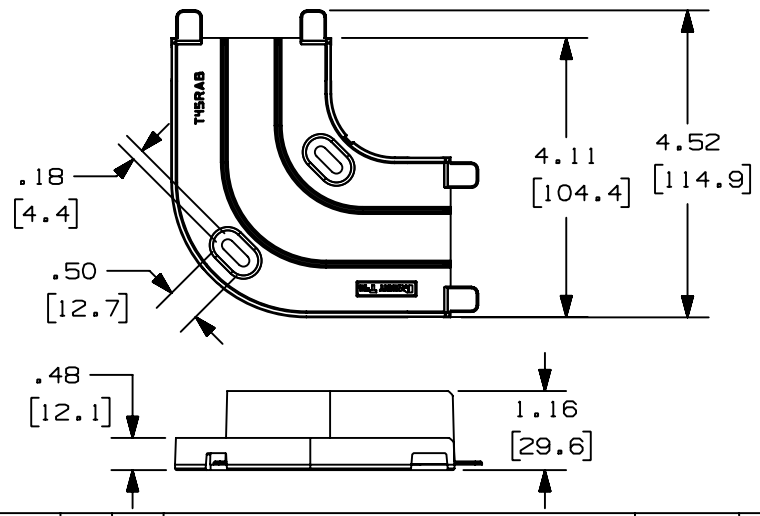

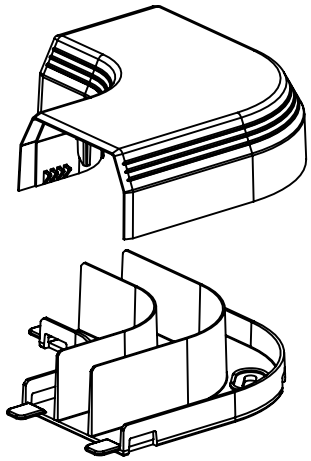

REV	DATE	BY	CHK	DESCRIPTION	ECN	CHK	CUST	SUP
R	10-28-99	RABO	HIW	RELEASED TO PRODUCTION.	36975-58	HIW	HIW	

CAD FILENAME/LAYERS: D36975DW_DC_T45RA_00A.PRT

PANDUIT CORP. TINLEY PARK, ILLINOIS

T-45 RIGHT ANGLE FITTING
(T45RA)
CUSTOMER DRAWING

UNLESS OTHERWISE SPECIFIED, DIMENSIONAL TOLERANCES ARE:
(.X) ± (.XXX) ±
(.XX) ±.03(.8) ANGLES ±

UNLESS OTHERWISE SPECIFIED, ALL DIMENSIONS ARE GIVEN IN INCHES, THIRD ANGLE PROJECTION.

DRAWN BY: RABO
MAT'L: PVC
SCALE: NONE
DATE: 10-28-99
CHECKED BY: BKR
DRAWING NO.: 36975-58
DWG SIZE: A