NOTES:

1. ELECTRICAL:

A. IMPEDANCE: 50Ω (NOMINAL)
B. FREQUENCY RANGE: 0-6 GHz
C. CONTACT RESISTANCE: CENTER: 20mΩMAX.: MEASURED AT 10mA MAX. 25 mΩMAX AFTER CYCLING
OUTSIDE: 10mΩ MAX. 15 mΩMAX AFTER CYCLING
D. INSULATION RESISTANCE: 500MΩ MIN.: MEASURED AT 100 VDC.
E. WITHSTANDIN VOLTAGE: NO LINE OR INSULATION BREAKDOWN: 200 VAC FOR 1 MIN.
F. V.S.W.R. : 1.3 MAX. AT DC TO 3GHz, 1.4 MAX. AT 3 TO 6GHz

2. PHYSICAL:

A. FEMALE CONTACT HOLDING FORCE: .15N MIN. : MEASURED WITH A Ø.475MM PIN GAUGE.
B. DURABILITY: 30 CYCLES
C. TEMPERATURE RANGE: -40°C TO +90°C.
D. AMC CONNECTOR MATING FORCE: 15N TYPICAL
E. AMC CONNECTOR DEMATING FORCE: 10N TYPICAL
F. AMC INTERFACE IS FULLY COMPATIBLE WITH "U.FL" SERIES PRODUCT.

3. MATERIALS AND FINISHES:

CONNECTOR BODY: PHOSPHOR BRONZE, SILVER PLATED (.08u MIN.) OVER COPPER (1-2u)
CONNECTOR CENTER CONTACT: PHOSPHOR BRONZE, GOLD PLATED (0.2u MIN.) OVER NICKEL (2-3u)
CONNECTOR INSULATOR: PBT
CABLE JACKET: FEP
CABLE DIELECTRIC: FEP
CABLE CENTER CONDUCTOR: 32AWG ANNEALED COPPER WIRE STRANDED, SILVER PLATED
CABLE OUTER CONDUCTOR: ANNEALED COPPER WIRE BRAID, SILVER PLATED

A-1PA-113-XXXYZ	
DRAWING NO.	
THIRD ANGLE PROJ.	

REVISIONS

REV	DESCRIPTION	DATE	ECO	APPR
A	RELEASE TO MFG.	2/20/03	44376	ORB
B	A) ADDED CABLE MATERIAL & MATE/DEMATE NOTES	3/6/03	44396	ORB
C	A) BODY PLATING WAS: GOLD PLATED OVER NICKEL B) NOTE 2D WAS: 25N TYPICAL	4/2/03	44402	BCG
D	REMOVED BUMP ON PLUG, 4 WAS 3.99, 5.2 WAS 5.19, 1.95 WAS 2.01; MΩ WAS mΩ	3/3/14	49763	EW

CABLE ASSEMBLY OVERALL LENGTH TOLERANCE

OVERALL LENGTH L (mm)	STANDARD TOLERANCE (mm)
35<L<200	± 4
200 < L 500	± 8
500 < L 1000	± 12
1000 < L	±1.5 %

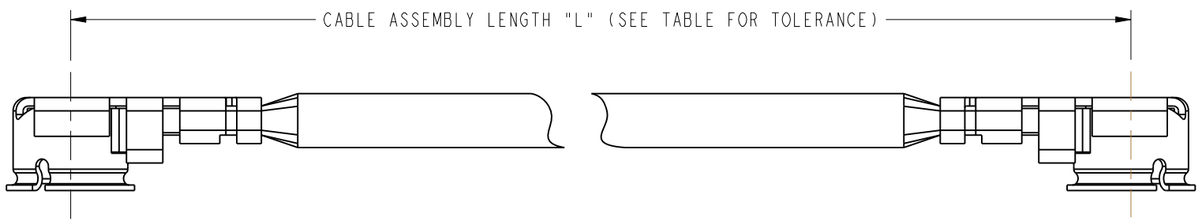

A-1PA-113-XXXYZ

SERIES NAME (A=AMC)

AMC RIGHT ANGLE PLUG

CABLE DIAMETER IN mm (113 = 1.13 mm)

CABLE ASSEMBLY LENGTH IN mm
(SHORTEST LENGTH IS 35mm)

CABLE COLOR: G=GRAY
B=BLACK
W=WHITE

NO. OF TERMINATED ENDS (1 OR 2)

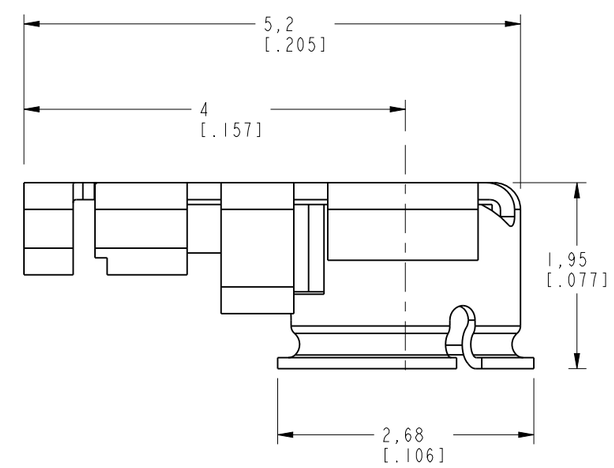

AMC RIGHT ANGLE PLUG

UNLESS OTHERWISE SPECIFIED, DIMENSIONS ARE IN INCHES AND TOLERANCES ARE:
2 PLACE DECIMAL ±.015 (0,381 mm) | 3 PLACE DECIMAL ±.005 (0,127 mm) | ANGLES ± 1°

NOTICE - These drawings, specifications, or other data (1) are, and remain the property of Amphenol Corp. (2) must be returned upon request; and (3) are confidential and not to be disclosed to any person other than those to whom they are given by Amphenol Corp. The furnishing of these drawings, specifications, or other data by Amphenol Corp., or to any other person to anyone for any purpose is not to be regarded by implication or otherwise in any manner licensing, granting rights or permitting such holder or any other person to manufacture, use or sell any product, process or design, patented or otherwise, that may in any way be related to or disclosed by said drawings, specifications, or other data.

MATERIAL

REFERENCE GEN# CASSY68

DRAWN G. ANTONINI	DATE 29-Jan-03	TITLE RIGHT ANGLE PLUG JUMPER
ENGINEER G. ANTONINI	DATE 29-Jan-03	
APPROVED O. BARTHELMES	DATE 2/20/03	
CAD FILE I:\AMC\A-1PA-113-XXXYZ		

Amphenol RF
Danbury, CT, USA
Tainan, Taiwan
Shenzhen, China
www.amphenolrf.com

SCALE: 8.0:1 | SHEET 1 OF 1

CODE ID	DWG SIZE	DRAWING NO.	REV
74868	B	A-1PA-113-XXXYZ	D