THIS DRAWING IS UNPUBLISHED. RELEASED FOR PUBLICATION - ,- .
© COPYRIGHT - By - ALL RIGHTS RESERVED.

LOC	DIST
AA	00

REVISIONS

P	LTR	DESCRIPTION	DATE	DWN	APVD
	B1	REVISED PER ECO-11-005033	23MAR11	RK	HMR

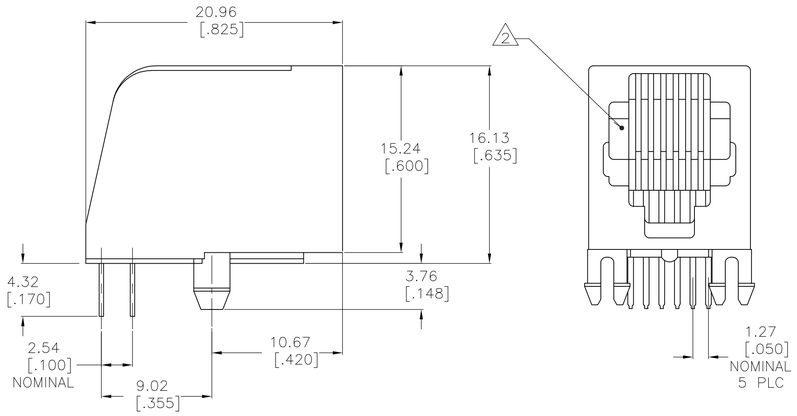

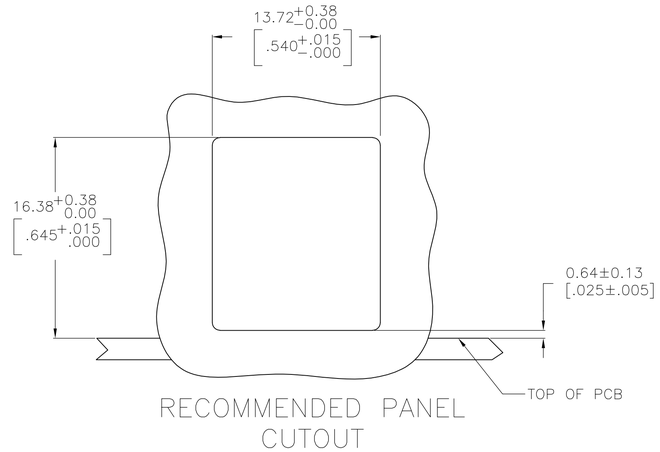

RECOMMENDED PANEL CUTOUT

1. MATERIAL: HOUSING – PBT POLYESTER, COLOR: GRAY
   TERMINAL -- 0.35 [.0138] THICK PHOS BRONZE
   PLATED IWTH 1.27 µm [.000050] THICK HARD GOLD
   IN LOCALIZED GOLD PLATE AREA AND 3.81 µm [.000150]
   THICK MATTE TIN IN SOLDER AREA OVER 1.27 µm
   [.000050] THICK NICKEL UNDERPLATE

2. CAVITY CONFORMS TO FCC RULES AND
   REGULATIONS PART 68 AND REA BULLETIN
   345-81, PE-76 SPECIFICATION FOR MODULAR
   TELEPHONE HARDWARE.

3. DIMENSIONS ARE MAXIMUM UNLESS OTHERWISE SHOWN

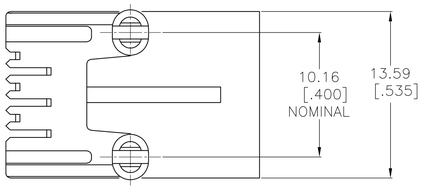

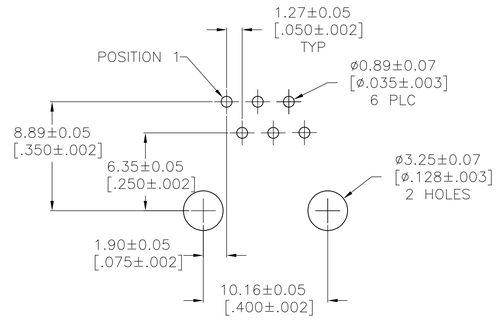

RECOMMENDED PRINTED CIRCUIT BOARD
LAYOUT
COMPONENT SIDE SHOWN

6	5520470-3
TERMINALS	PART NUMBER

THIS DRAWING IS A CONTROLLED DOCUMENT.

DIMENSIONS: mm [INCHES]

TOLERANCES UNLESS OTHERWISE SPECIFIED:
0 PLC ± –
1 PLC ± –
2 PLC ± 0.13[.005]
3 PLC ± –
4 PLC ± –
ANGLES ± –

MATERIAL: SEE NOTE 1
FINISH: SEE NOTE 1

DWN L.A.MAYER 30AUG2007
CHK P.RECCE 30AUG2007
APVD S.FLICKINGER 30AUG2007
PRODUCT SPEC 108-1163
APPLICATION SPEC 114-2048
WEIGHT –

TE Connectivity

NAME: MODULAR JACK ASSEMBLY, SIDE ENTRY, 6 POSITION, FLANGELESS

SIZE A1 | CAGE CODE 00779 | DRAWING NO C-5520470 | RESTRICTED TO –

CUSTOMER DRAWING | SCALE 4:1 | SHEET 1 OF 1 | REV B1

4805 (3/11)