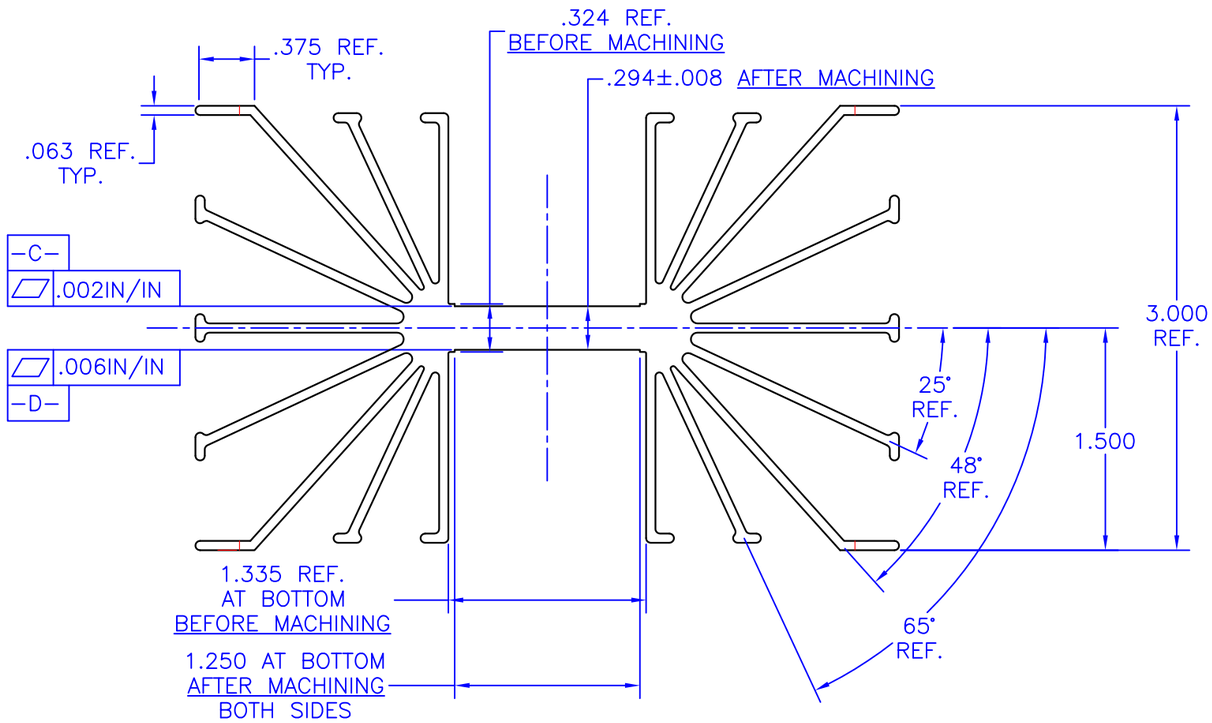

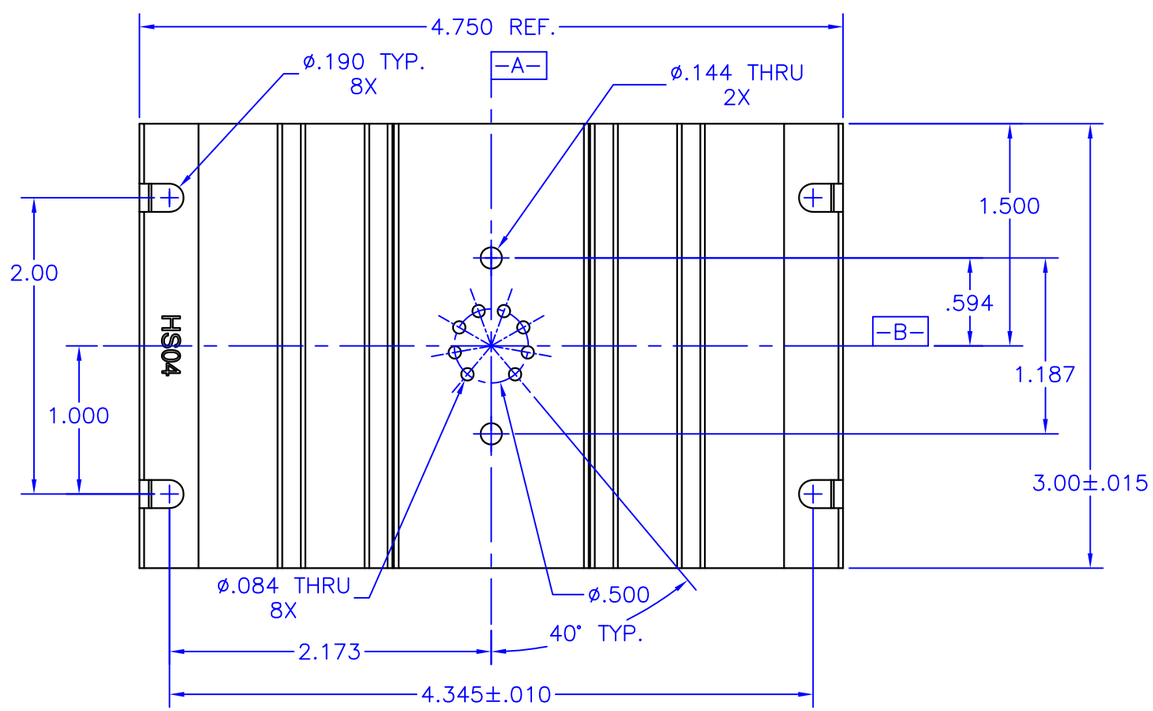

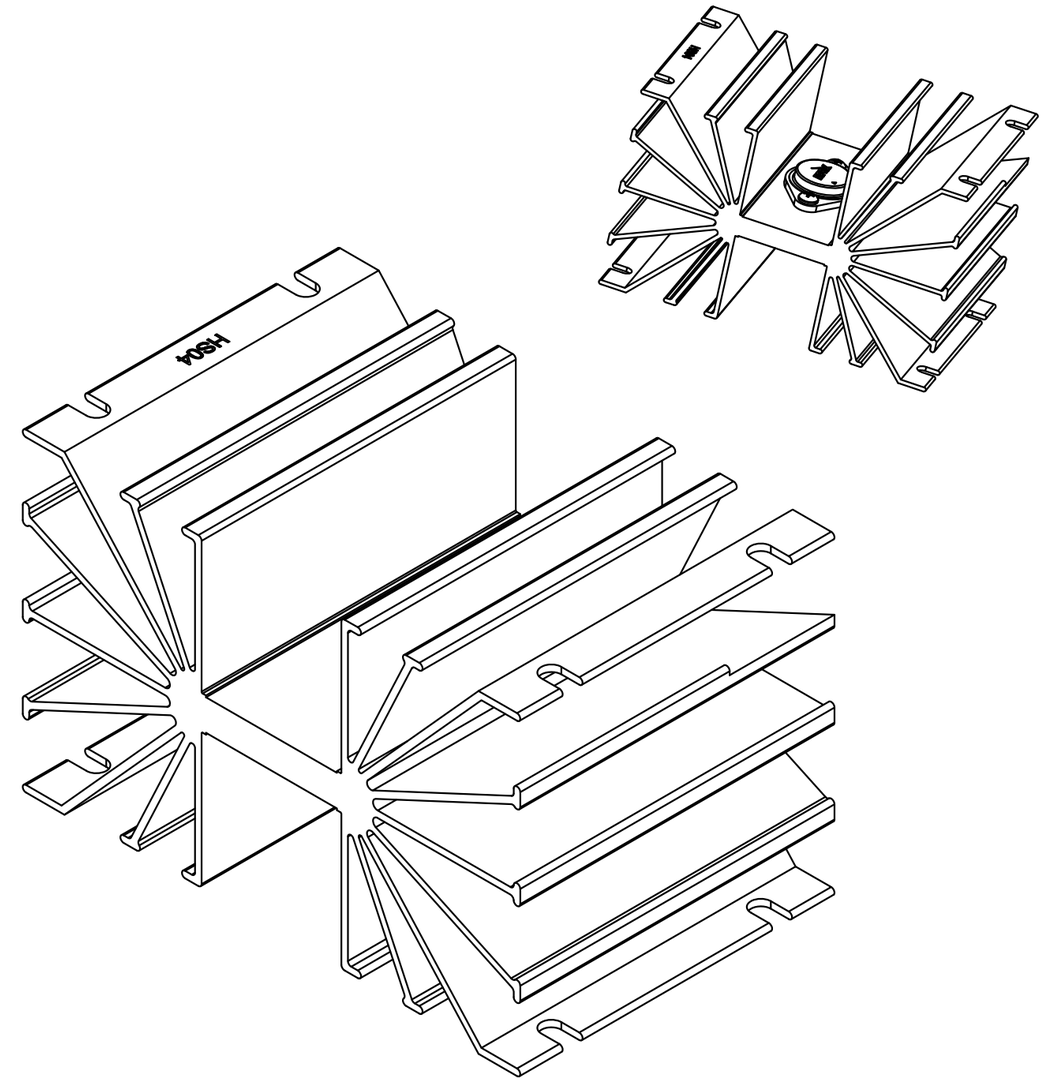

NOTES:

1. Unless otherwise noted, all dimensions are in inches.
2. Break all sharp edges, de-burr & remove loose chips.
3. Material: 6063-T5 aluminum (AAVID Thermalloy extrusion 60650)
4. Finish: Anodize per MIL-A-8625, Type II, Class 2, Black
   Typical breakdown voltage > 300V
5. Mark with contrasting ink as shown, if specified by P.O.
6. Approximate Weight: 11.6 oz [329g]

TOLERANCES - UNLESS OTHERWISE SPECIFIED .XX = ±.05 [.002] .XXX = ±.005 [.0002] ANG. = ±2°	APEX MICROTECHNOLOGY PRECISION PRODUCTS	TITLE: HEATSINK, TO-3				MODEL: HS04	
		SUBJECT: MECHANICAL DRAWING					
		ENGINEER: D-M	DRAWN BY: P.ECK	DCA: 12434	SH. 1 OF 1	FILENAME: HS04	REV: I / DATE: 14NOV12