PART NAME	POTTING BOX (STYLE B)	PART No.	PB-1558-TF & PB-1559-TF / PB-1574-TF TO PB-1583-TF

MATERIAL: ABS THERMOPLASTIC (CHI MEI POLYLAC PA-765)
FLAMMABILITY RATING OF 94V-0 AT 0.070" THICKNESS
AND CONTINUOUS USE TEMPERATURE OF 70° C.)

COLOR: BLACK

FINISH: OUTSIDE SURFACES ARE TEXTURED FINISH.

COVER REDUCES INSIDE HEIGHT BY 0.075, EXCEPT ON PB-1577-TF COVER REDUCES INSIDE HEIGHT BY 0.060 & PB-1583-TF COVER REDUCES INSIDE HEIGHT BY 0.110.

ALL COVERS HAVE SMOOTH SURFACES.

LENGTH AND WIDTH DIMENSIONS ARE TAKEN FROM CLOSED END OF THE BOX. DIMENSIONS INCREASE SLIGHTLY AT OPEN END DUE TO TAPER.

SHIPPED IN PACKAGES OF TEN (10).

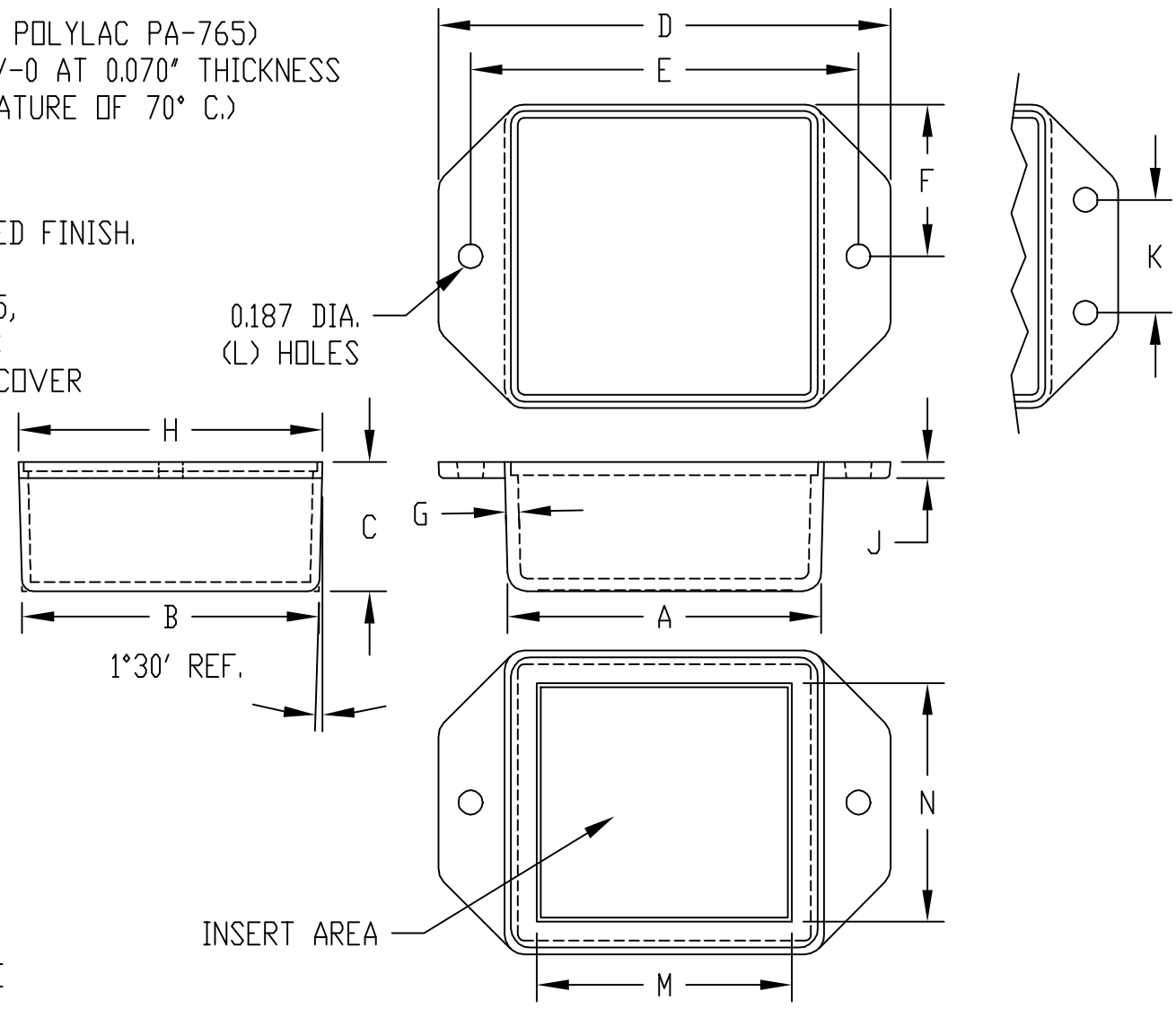

ALL DIMENSIONS HAVE ±0.010 TOLERANCE

PART No.	A	B	C	D	E	F	G	H	J	K	L	M	N	OPTIONAL COVER
PB-1558-TF	2.000	1.500	1.000	2.875	2.500	0.776	0.070	1.552	0.125	----	2	----	----	PBC-1558-CN
PB-1559-TF	3.000	2.000	1.500	3.875	3.500	1.039	0.070	2.078	0.125	----	2	----	----	PBC-1575-C
PB-1574-TF	2.000	2.000	1.500	2.875	2.500	1.039	0.070	2.078	0.125	----	2	----	----	PBC-1574-C
PB-1575-TF	3.030	2.030	0.900	3.875	3.500	1.039	0.070	2.078	0.125	----	2	----	----	PBC-1575-C
PB-1576-TF	3.000	3.000	1.500	3.875	3.500	1.539	0.070	3.078	0.125	----	2	----	----	PBC-1576-C
PB-1577-TF	1.040	1.040	0.785	1.775	1.378	0.537	0.060	1.075	0.100	----	2	----	----	PBC-1577-C
PB-1578-TF	4.000	2.125	2.000	4.875	4.500	1.115	0.070	2.230	0.125	----	2	3.790	1.906	PBC-1578-C
PB-1579-TF	1.500	1.250	0.800	2.375	2.000	0.646	0.070	1.292	0.125	----	2	----	----	PBC-1579-C
PB-1580-TF	4.000	1.750	1.000	4.875	4.500	0.901	0.070	1.802	0.125	----	2	----	----	PBC-1580-C
PB-1581-TF	2.079	1.280	0.445	2.875	2.438	0.650	0.070	1.300	0.070	----	2	----	----	PBC-1581-C
PB-1582-TF	4.063	2.188	0.900	4.875	4.500	1.115	0.070	2.230	0.125	----	2	----	----	PBC-1578-C
PB-1583-TF	4.375	3.125	2.000	5.500	5.000	----	0.100	3.223	0.125	1.750	4	3.974	2.723	PBC-1583-C

PART NAME	POTTING BOX (STYLE C)	PART No.	PB-1549-BF/PB-1553-BF & PB-1554-BF/PB-1558-BF PB-1559-BF, PB-1574-BF, PB-1576-BF & PB-1577-BF

MATERIAL: ABS THERMOPLASTIC (CHI MEI POLYLAC PA-765)
FLAMMABILITY RATING OF 94V-0 AT 0.070" THICKNESS
AND CONTINUOUS USE TEMPERATURE OF 70° C.)

COLOR: BLACK
FINISH: SMOOTH

COVER REDUCES INSIDE HEIGHT BY 0.100 EXCEPT ON PB-1574-BF, PB-1576-BF & PB-1549-BF COVER REDUCES INSIDE HEIGHT BY 0.094. ON PB-1577-BF COVER REDUCES INSIDE HEIGHT BY 0.078.

ALL COVERS HAVE SMOOTH SURFACES.

SHIPPED IN PACKAGES OF TEN (10).

ALL DIMENSIONS HAVE ±0.010 TOLERANCE

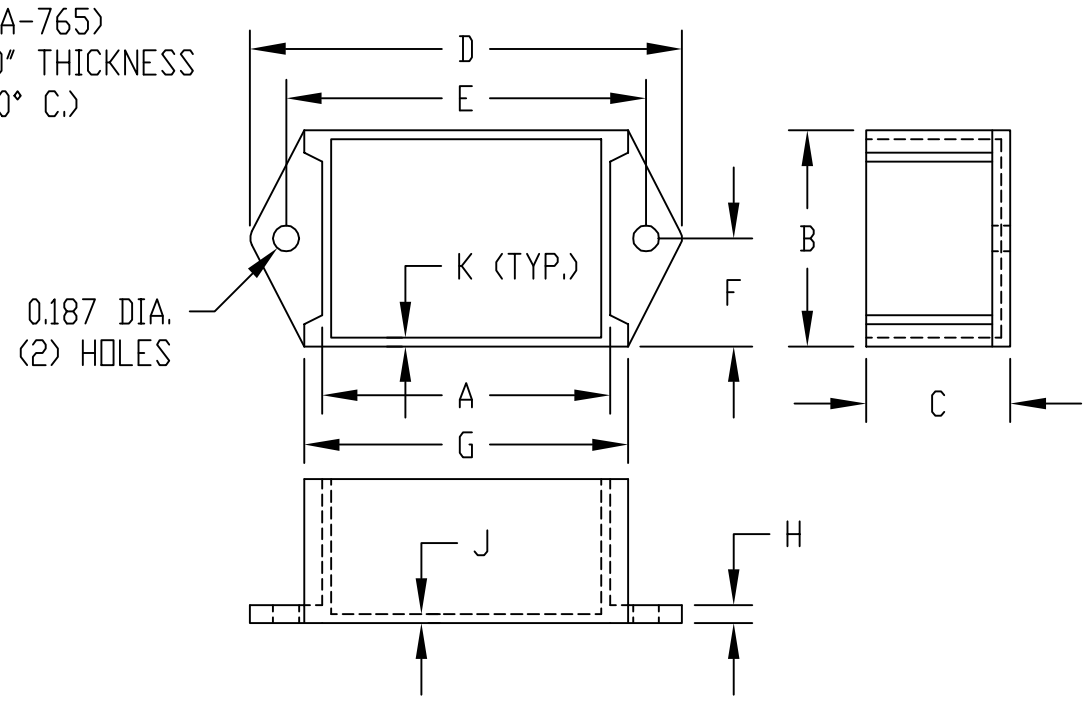

PART No.	A	B	C	D	E	F	G	H	J	K	OPTIONAL COVER
PB-1549-BF	3.050	3.050	0.875	4.000	3.500	1.538	3.324	0.125	0.085	0.082	PBC-1576-CN
PB-1553-BF	3.000	2.000	0.500	4.000	3.500	1.000	3.304	0.125	0.060	0.074	PBC-1559-C
PB-1554-BF	3.000	2.000	1.000	4.000	3.500	1.000	3.304	0.125	0.060	0.074	PBC-1559-C
PB-1558-BF	2.000	1.500	1.000	3.000	2.500	0.750	2.250	0.125	0.063	0.063	PBC-1558-C
PB-1559-BF	3.000	2.000	1.500	4.000	3.500	1.000	3.250	0.125	0.063	0.063	PBC-1559-C
PB-1574-BF	2.000	2.000	1.500	3.000	2.500	1.000	2.300	0.125	0.063	0.050	PBC-1574-CN
PB-1576-BF	3.000	3.000	1.500	4.000	3.500	1.500	3.300	0.125	0.094	0.050	PBC-1576-CN
PB-1577-BF	1.000	1.000	0.750	1.875	1.375	0.500	1.250	0.090	0.063	0.045	PBC-1577-CN

Rev. 16NOV07