No.	Changes and/or Note No.	Date	Intr.	No.	Changes and/or Note No.	Date	Intr.

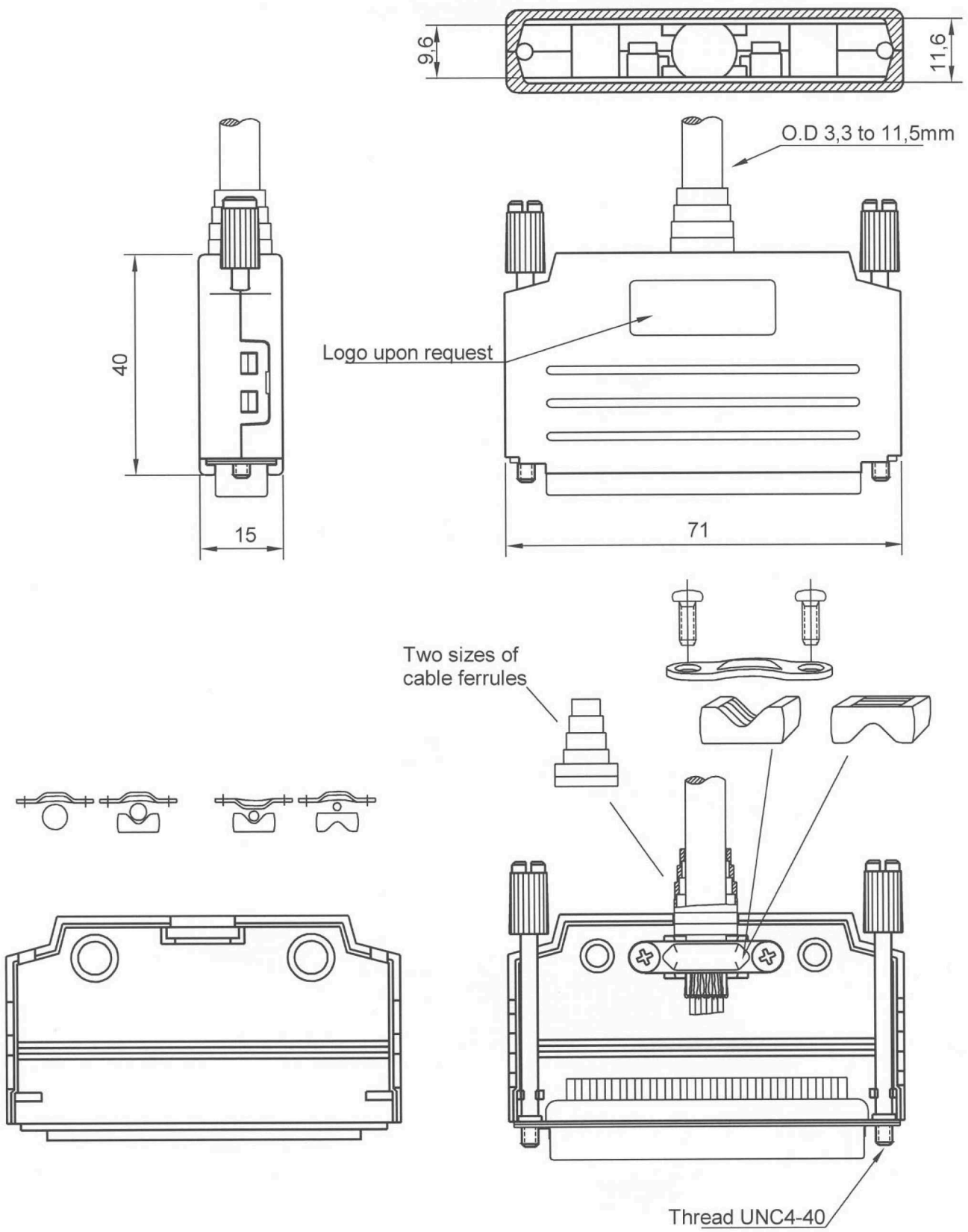

DATE	DRAWN	SCALE	MATERIAL TYPE
950405	GMN	1:1	
6260-0105-04 **6261-0105-04**	APPROVED		REPLACES

encitech connectors AB

DPPK-M-37

DRAWING No
6688-9428