Alle Rechte vorbehalten/ *All rights reserved*

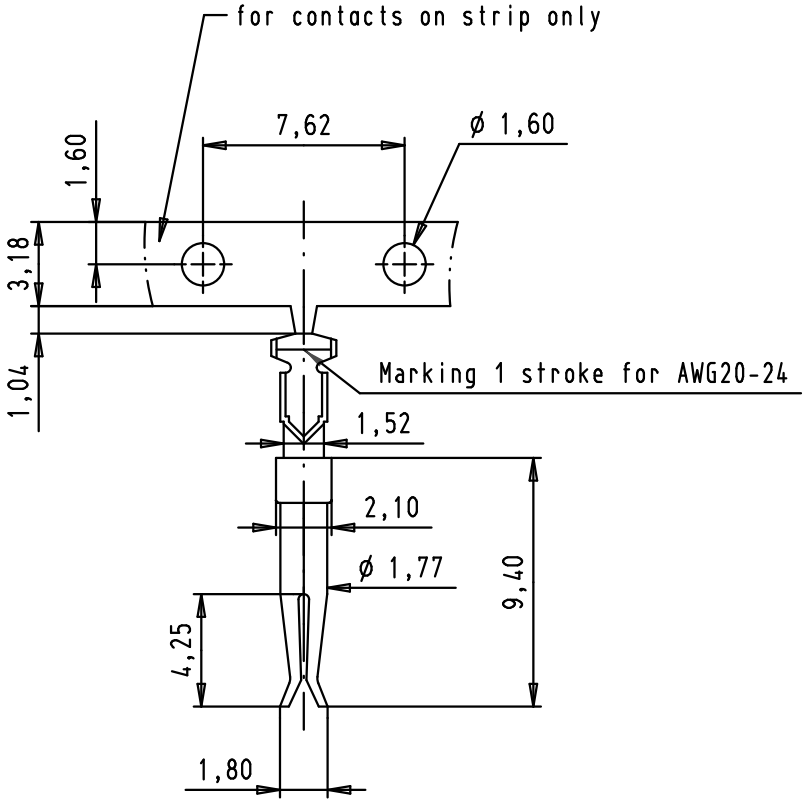

Section A-A

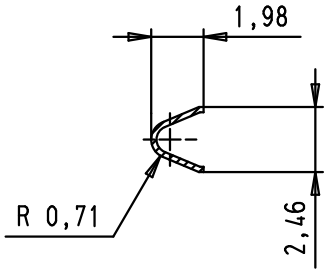

Section B-B

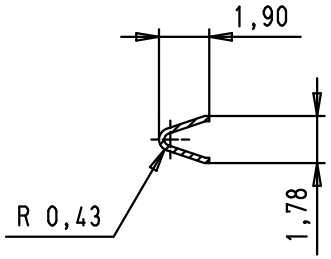

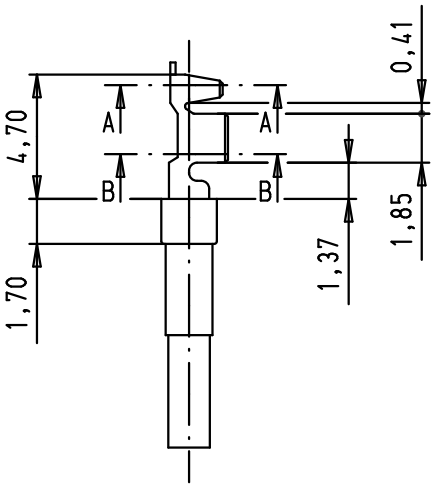

Reel unrolling left reversed

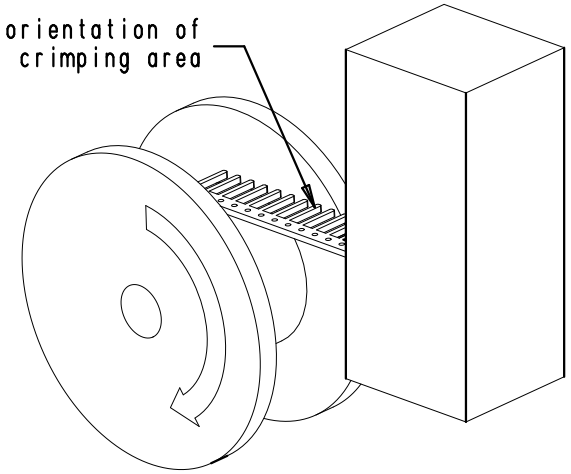

Base material: brass
Plating: sliding contact selective gold plated over nickel
nickel plated crimp area
Number of contacts per reel: 10000

Part number	Performance level
09 67 000 8248	PL2
09 67 000 8247	PL3
09 67 000 8246	PL1

Mod.	Dat.	Name
36288	13/01/12	SD
33986	24/04/07	PK
33242	17/10/05	JMDR
31476	24/03/03	PP

	Dat.	Name
Detail.	24/03/03	PP
Insp.	13/01/12	JB
Stand.		

All Dim. in mm
Orig. Size DIN A 4

HARTING EURL
F-95972 Paris

D-Sub, stamped female
AWG 20-24 crimp contact, reel
unrolling left reversed

Maßstab/ *Scale* 3,5:1

TB 09 67 000 824X

Sub.

Blatt/ *Page* 1/1