THIS DRAWING IS UNPUBLISHED. RELEASED FOR PUBLICATION -,- .
© COPYRIGHT - By - ALL RIGHTS RESERVED.

LOC	DIST
FB	00

REVISIONS

P	LTR	DESCRIPTION	DATE	DWN	APVD
	P	REVISED PER ECO-11-005033	24MAR11	RK	HMR

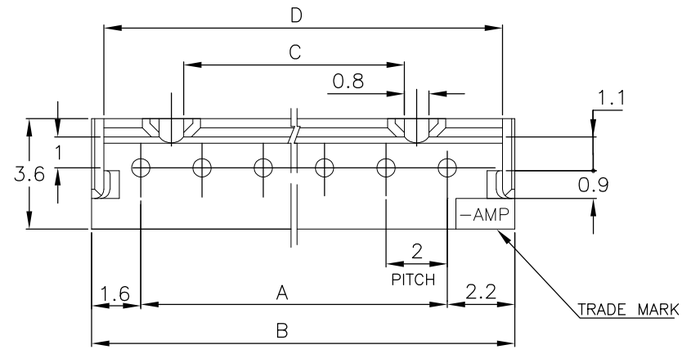

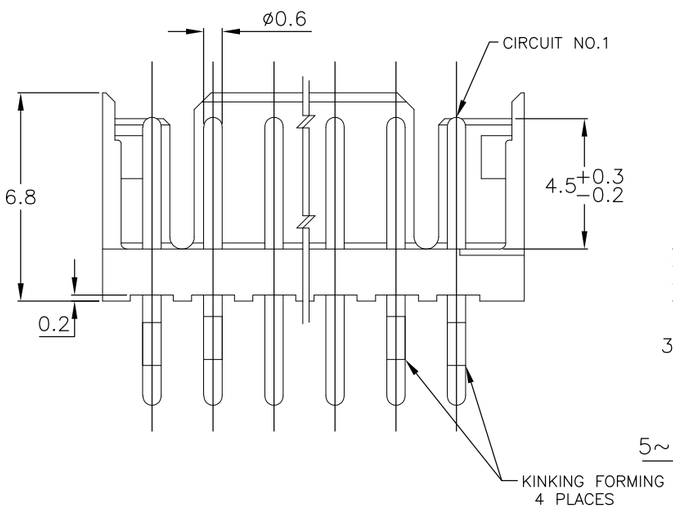

5~15 Pos.

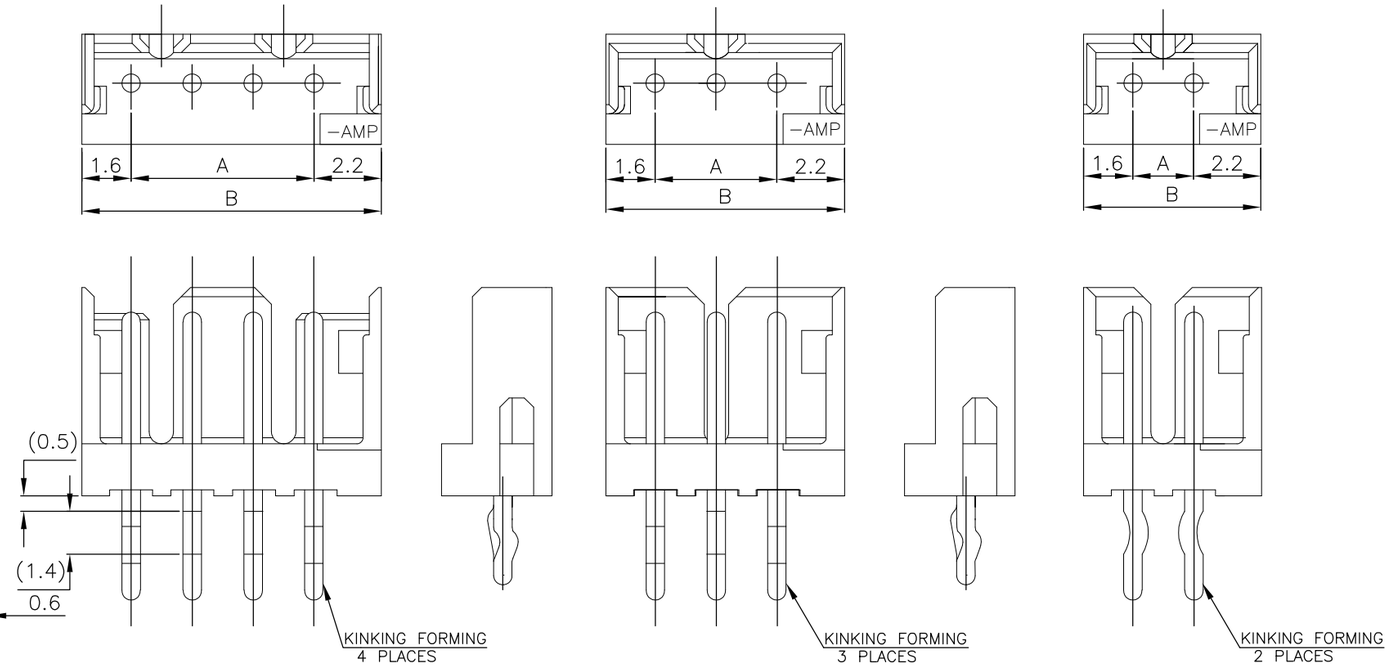

4 POS. 3 POS. 2 POS.

		7-292161-5		5-292161-5		3-292161-5		1-292161-5		15	28	31.8	25.2	31.0
		7-	-4	5-	-4	3-	-4	1-	-4	14	26	29.8	23.2	29.0
		7-	-3	5-	-3	3-	-3	1-	-3	13	24	27.8	21.2	27.0
9-292161-2		7-	-2	5-	-2	3-	-2	1-	-2	12	22	25.8	19.2	25.0
9-	-1	7-	-1	5-	-1	3-	-1	1-	-1	11	20	23.8	17.2	23.0
9-	-0	7-	-0	5-	-0	3-	-0	1-	-0	10	18	21.8	15.2	21.0
8-	-9	6-	-9	4-	-9	2-	-9		-9	9	16	19.8	13.2	19.0
8-	-8	6-	-8	4-	-8	2-	-8		-8	8	14	17.8	11.2	17.0
8-	-7	6-	-7	4-	-7	2-	-7		-7	7	12	15.8	9.2	15.0
8-	-6	6-	-6	4-	-6	2-	-6		-6	6	10	13.8	7.2	13.0
8-	-5	6-	-5	4-	-5	2-	-5		-5	5	8	11.8	5.2	11.0
8-	-4	6-	-4	4-	-4	2-	-4		-4	4	6	9.8	3.2	9.0
8-	-3	6-	-3	4-	-3	2-	-3		-3	3	4	7.8	—	7.0
8-292161-2		6-292161-2		4-292161-2		2-292161-2		292161-2		2	2	5.8	—	5.0
RED		BLACK		YELLOW		BLUE		NATURAL		Pos.	A	B	C	D
PART NO.														

NOTES:

1. MATERIAL: HOUSING - NYLON 66 (UL94V-0)
   POST - TIN BRASS
2. APPLICABLE RECEPTACLE P/N 173977

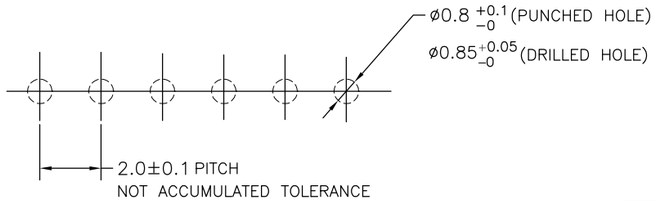

RECOMMENDABLE PCB LAYOUT
(PCB THK:0.8-1.6)

TOLERANCES UNLESS OTHERWISE SPECIFIED:

10≥ * : ±0.2
30≥ * >10 : ±0.25
100≥ * >30 : ±0.3
ANGLE : ±3°

THIS DRAWING IS A CONTROLLED DOCUMENT.

DIMENSIONS: mm

TOLERANCES UNLESS OTHERWISE SPECIFIED:
0 PLC ±-
1 PLC ±-
2 PLC ±-
3 PLC ±-
4 PLC ±-
ANGLES ±-

MATERIAL: SEE NOTE
FINISH: SEE NOTE

DWN	S.XU	31JAN03
CHK	S.YAO	31JAN03
APVD	T. SASAKI	31JAN03
PRODUCT SPEC	108-60016	
APPLICATION SPEC	—	
WEIGHT	—	

TE Connectivity

NAME: POST HEADER ASS'Y VERTICAL TYPE (AMP CT CONNECTOR 2mm PITCH)

SIZE	CAGE CODE	DRAWING NO	RESTRICTED TO
A3	00779	C-292161	—

CUSTOMER DRAWING | SCALE 5:1 | SHEET 1 OF 1 | REV P