THIS DRAWING IS UNPUBLISHED. RELEASED FOR PUBLICATION -.- .
© COPYRIGHT - BY TYCO ELECTRONICS CORPORATION. ALL RIGHTS RESERVED.

LOC	DIST
DF	DO

REVISIONS

P	LTR	DESCRIPTION	DATE	DWN	APVD
	N	REV PER ECO 06-11126	5-16-06	CT	DM
	P	REV PER ECO-08-018752	8-21-08	PK	BW

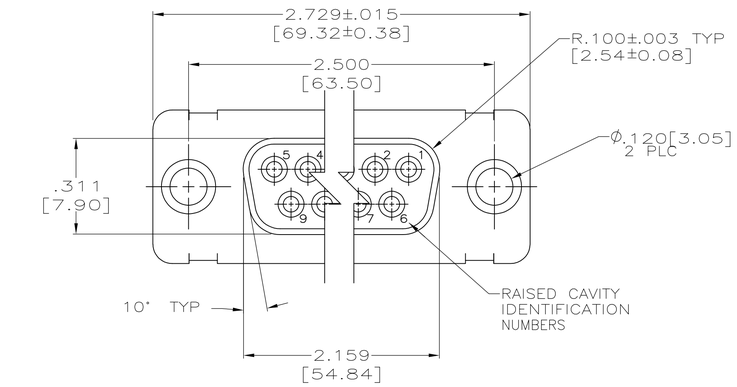

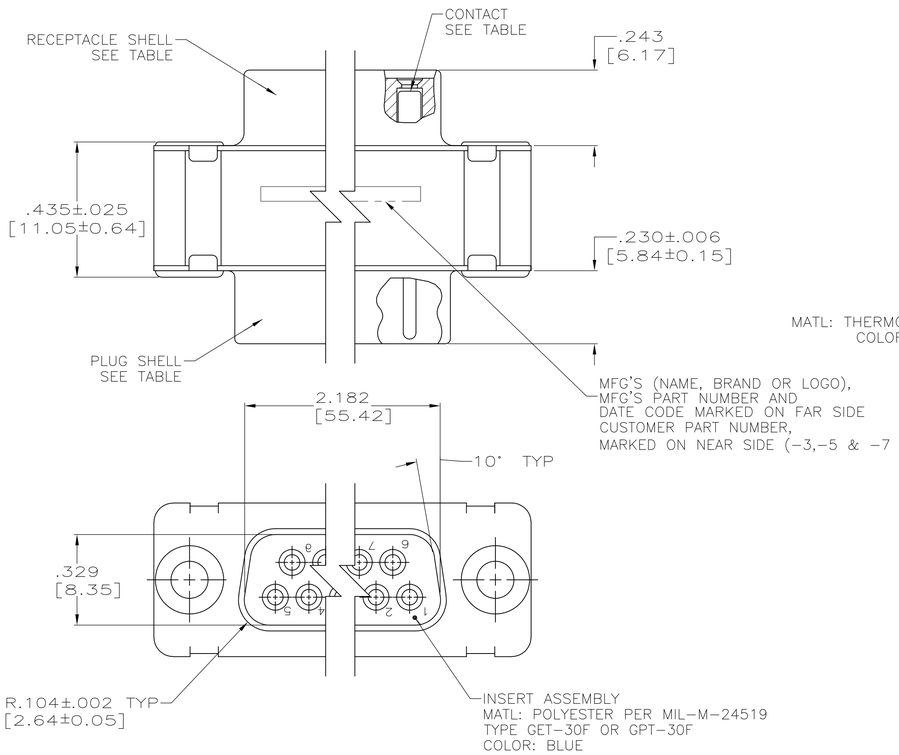

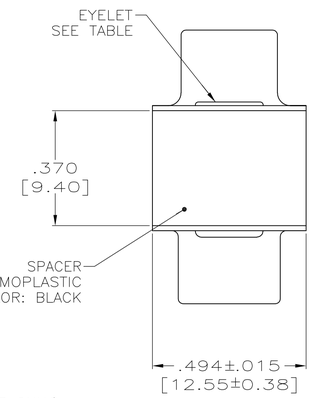

1. CONTACTS INCLUDED IN ASSEMBLY EXCEPT FOR 212562-7.
2. MATL: STEEL, PER ASTM-A-109.
3. FINISH: CADIUM PER QQ-P-416.
4. CONTACT
   BODY MATL: BERYLLIUM COPPER PER ASTM-B-197.
   BODY FINISH: PLATED GOLD, .000050 MIN THK PER MIL-G-45204 OVER NICKEL, .000050 MIN THK PER QQ-N-290.
   HOOD MATL: STAINLESS STEEL PER ASTM-A-167.
   HOOD FINISH: PASSIVATED PER ASTM-A-380
5. FINISH: PLATED ZINC .00020 MIN THK PER ASTM-B-633. YELLOW CHROMATE FINISH.
6. MATL: BRASS PER ASTM-B-36.
7. FINISH: PLATED GOLD, .000050 MIN THK PER MIL-G-45204 OVER COPPER, .000100 MIN THK PER MIL-C-14550.
8. CONTACT
   BODY MATL: BERYLLIUM COPPER PER ASTM-B-197.
   BODY AND HOOD FINISH: PLATED GOLD, .000050 MIN THK PER MIL-G-45204 OVER COPPER, .000100 MIN THK PER MIL-C-14550.
   HOOD MATL: BRASS PER ASTM-B-36

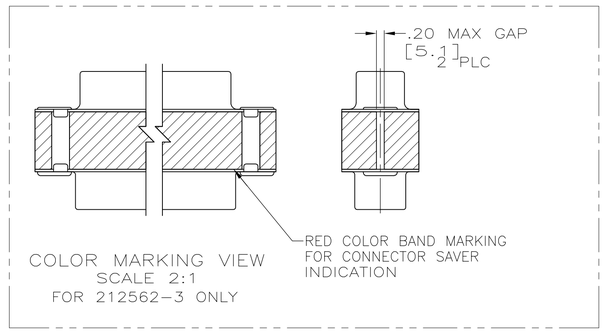

	EYELET	SHELLS	CONTACT	CUSTOMER P/N	PART NO.
	6 7	7 6	---	PT2-111-4	212562-7
	6 7	7 6	4	4U884 SOCN R10002677-0104	212562-6
	6 7	7 6	8	PT2-111-10	212562-5
OBSOLETE	6 7	7 6	8	–	212562-4
	6 7	7 6	4	(1J02-104)	212562-3
	6 7	7 6	8	–	212562-2
	6 5	2 3	4	–	212562-1

THIS DRAWING IS A CONTROLLED DOCUMENT.

DIMENSIONS: INCHES [mm]

TOLERANCES UNLESS OTHERWISE SPECIFIED:
0 PLC ± –
1 PLC ± –
2 PLC ± –
3 PLC ± .005 [0.13]
4 PLC ± –
ANGLES ± –

MATERIAL –
FINISH –

DWN T. THOMPSON 11-07-94
CHK D. MANTIONE 11-07-94
APVD D. MANTIONE 11-07-94
PRODUCT SPEC —
APPLICATION SPEC —
WEIGHT —

Tyco Electronics
Tyco Electronics Corporation
Harrisburg, PA 17105-3608

NAME
CONNECTOR SAVER, AMPLIMITE
37 POSITION, SIZE 4, SERIES 109

SIZE	CAGE CODE	DRAWING NO	RESTRICTED TO
A1	00779	C-212562	—

CUSTOMER DRAWING | SCALE 4:1 | SHEET 1 OF 1 | REV P

AMP 4805 REV 31MAR2000