MICRO SWITCH
A DIVISION OF MINNEAPOLIS-HONEYWELL REGULATOR COMPANY
FREEPORT, ILLINOIS
FED. MFR. CODE 91929

SWITCH — ENCLOSED

CATALOG LISTING
51ML17

THIS DRAWING COVERS A PROPRIETARY ITEM AND IS THE PROPERTY OF MICRO SWITCH, A DIVISION OF HONEYWELL. THIS DRAWING IS NOT TO BE COPIED OR USED WITHOUT THE APPROVAL OF MICRO SWITCH.

(M) 51ML17 ISSUE 1

51ML17

DRAWING NUMBER M 2 8

ISSUE X X X

REPLACES

RELEASE NO. SR5043

REVISIONS

A	C010656	K.F.W. 24 JUL. 56
B	C011247	O.M.W. 5 MAR 58
C	C012841	H B W 20 JAN 65
D	C020578	M B F DEC 65
E	CO 52194-D	T R F 23 SEPT 83
F	C055051-B	J A P 17 DEC 84
G	C074287	G J W 17 APR 93

DRAWN R. G. C. 14, FEB. '56
CHECK GCH 21 FEB. 56
CHECK JWM 16 FEB 56
CHECK CN 16 FEB 56

74-963

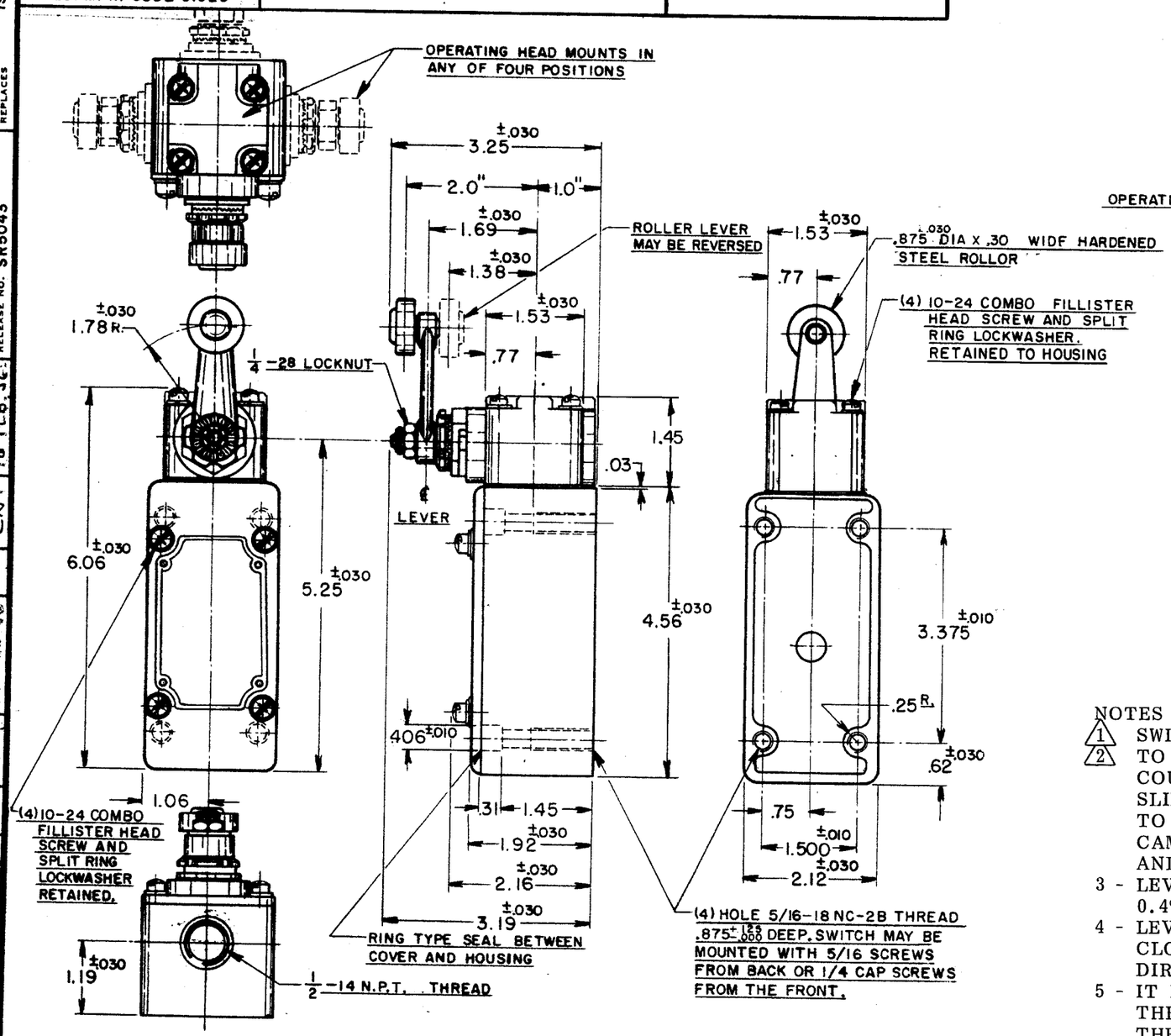

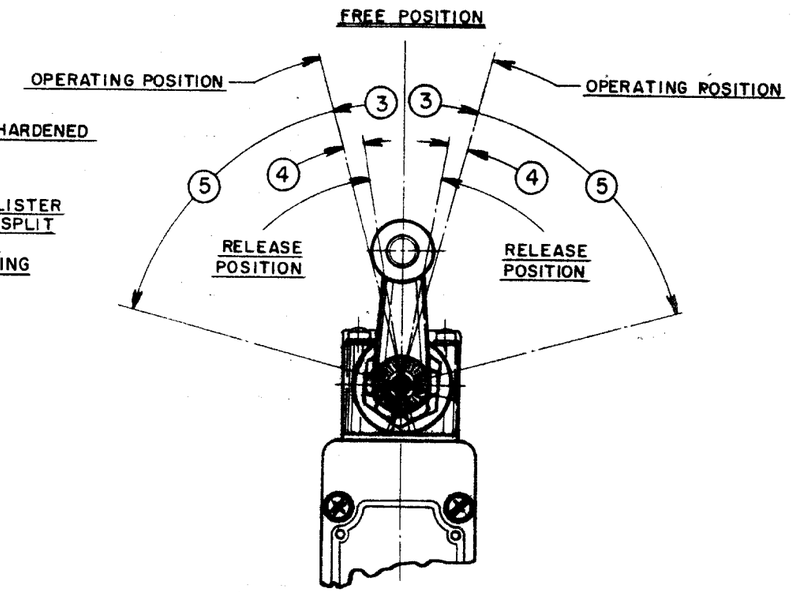

NOTES

1 2 SWITCH IS ASSEMBLED FOR ACTUATION IN EITHER DIRECTION TO CONVERT SWITCH FOR ACTUATION EITHER CLOCKWISE OR COUNTER-CLOCKWISE DIRECTION ONLY, REMOVE THE HEAD AND SLIDE THE CAM TOWARD THE REAR OF THE HEAD SUFFICIENTLY TO DISENGAGE FROM THE FLATS ON THE SHAFT. ROTATE THE CAM 90° IN THE OPPOSITE DIRECTION OF THE ACTUATION DESIRED AND RE-ENGAGE THE CAM WITH THE FLATS ON THE SHAFT

3 - LEVER MAY BE POSITIVELY LOCKED AT INTERVALS OF APPROX 0.4° (870 POSITIONS)

4 - LEVER MAY BE ADJUSTED TO ACTUATE THE SWITCH IN THE CLOCKWISE DIRECTION ONLY, THE COUNTER-CLOCKWISE DIRECTION ONLY OR IN BOTH DIRECTIONS 1 2

5 - IT IS ESSENTIAL TO PREVENT ENTRANCE OF HARMFUL AGENTS THRU THE CONDUIT OPENING TO OBTAIN THE FULL BENEFIT OF THE SEALED CONSTRUCTION PROVIDED IN THIS UNIT

6 - MECHANICAL LIFE WILL BE 100,000 OPERATIONS MINIMUM

CHARACTERISTICS

OPERATING FORCE — — — — — 3 LBS. MAX.
FULL OVERTRAVEL FORCE — 4 LBS. MAX.

PRETRAVEL — — — — — — — (3) 12° MAX.
DIFFERENTIAL TRAVEL — — — (4) 4° MAX.
OVERTRAVEL — — — — — — — (5) 60° MIN.
SWITCH — BASIC REPLACEMENT MT-4RI-A68

ELECTRICAL DATA

CONTACT ARRANGEMENT
S. P. D. T.

SCALE 1/2 TO 1
DO NOT SCALE PRINT

UNLESS OTHERWISE SPECIFIED
DIMENSIONS ARE IN INCHES

TOLERANCES ARE:

ONE PLACE	(.0)	±.030
TWO PLACE	(.00)	±.015
THREE PLACE	(.000)	±.005
ANGLES		±

WEIGHT