Feb.1.2018 Copyright 2018 HIROSE ELECTRIC CO., LTD. All Rights Reserved.

	COUNT	DESCRIPTION OF REVISIONS	BY	CHKD	DATE		COUNT	DESCRIPTION OF REVISIONS	BY	CHKD	DATE
△					. .	△					. .
△					. .	△					. .
△					. .	△					. .

INSERTION FIGURE OF CRIMP CONTACT

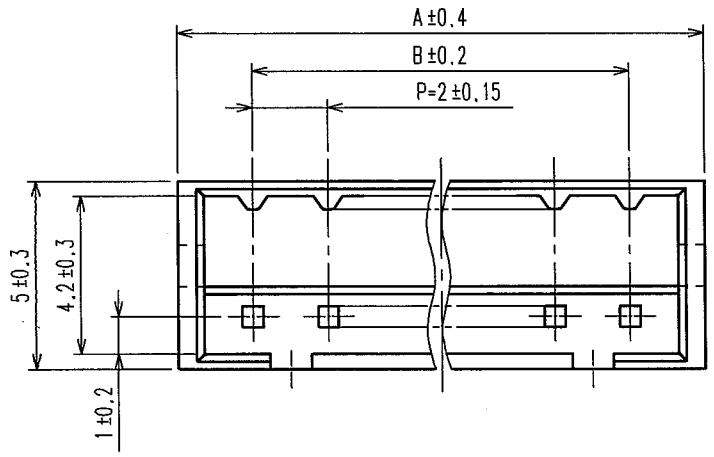

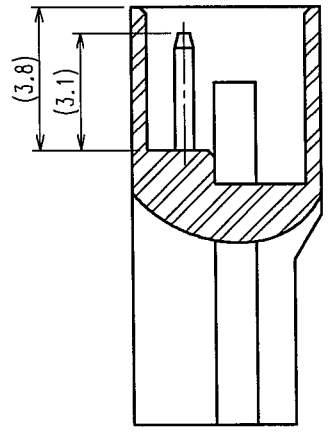

CODE No.	PART No.	CONTACTS	A	B
CL543-0064-2	DF3- 2EP-2C	2	6.0	2.0
CL543-0065-5	DF3- 3EP-2C	3	8.0	4.0
CL543-0066-8	DF3- 4EP-2C	4	10.0	6.0
CL543-0067-0	DF3- 5EP-2C	5	12.0	8.0
CL543-0068-3	DF3- 6EP-2C	6	14.0	10.0
CL543-0069-6	DF3- 7EP-2C	7	16.0	12.0
CL543-0070-5	DF3- 8EP-2C	8	18.0	14.0
CL543-0071-8	DF3- 9EP-2C	9	20.0	16.0
CL543-0072-0	DF3-10EP-2C	10	22.0	18.0
CL543-0073-3	DF3-11EP-2C	11	24.0	20.0
CL543-0074-6	DF3-12EP-2C	12	26.0	22.0
CL543-0075-9	DF3-13EP-2C	13	28.0	24.0
CL543-0076-1	DF3-14EP-2C	14	30.0	26.0
CL543-0077-4	DF3-15EP-2C	15	32.0	28.0

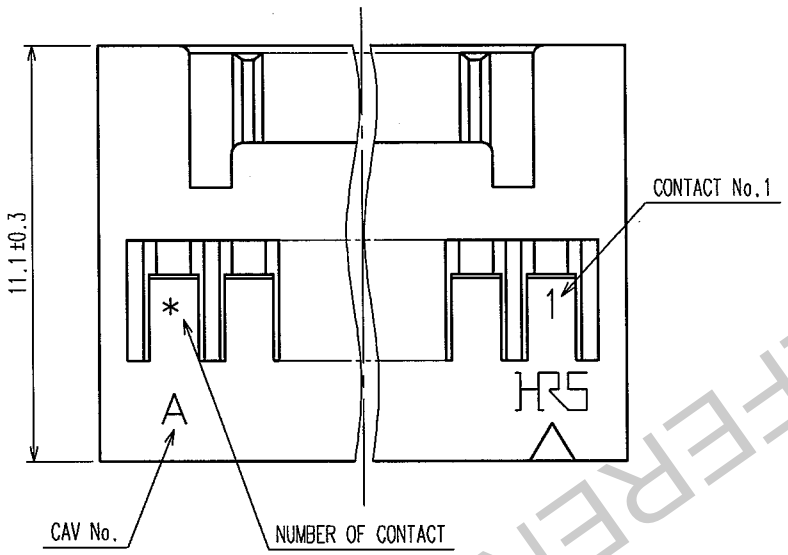

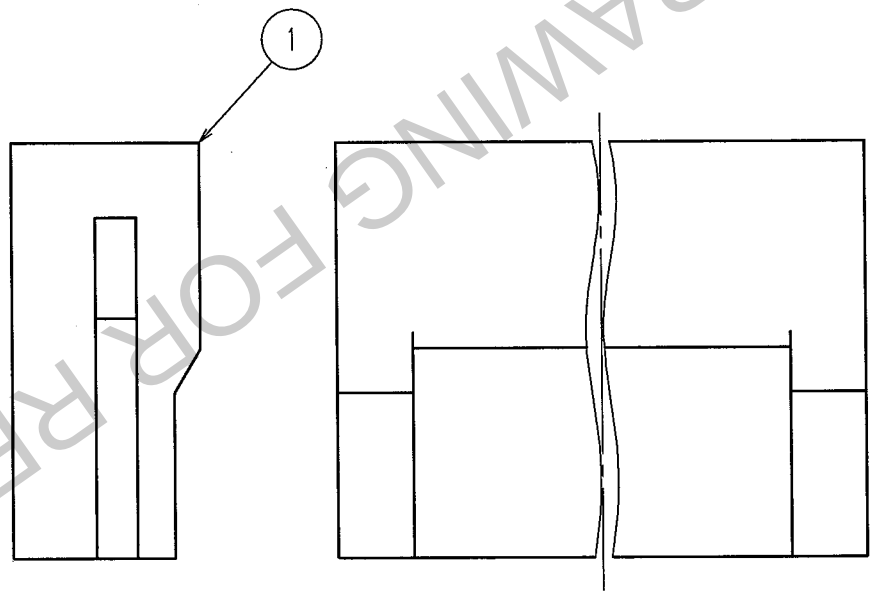

MATED CONNECTORS

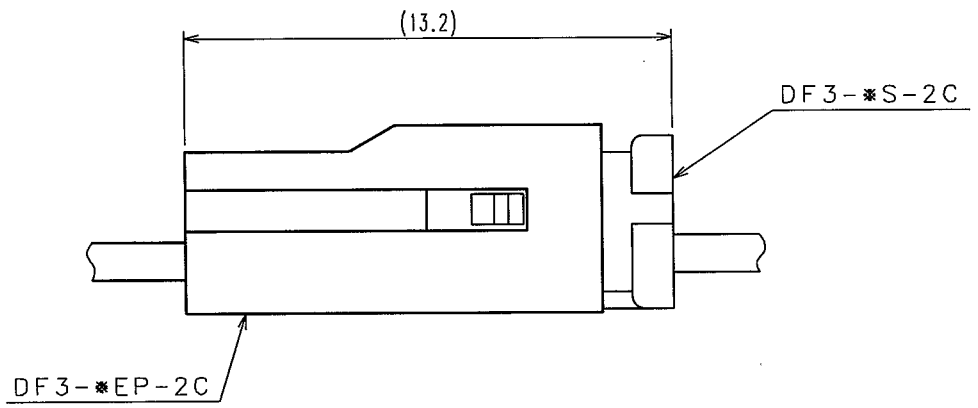

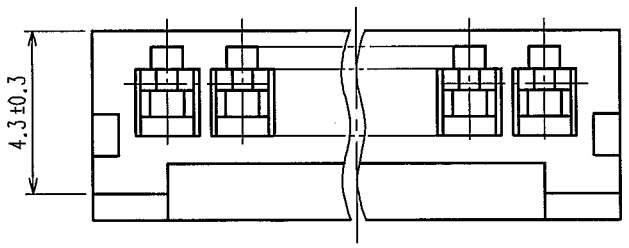

HRS DRAWING FOR REFERENCE

NO.	MATERIAL	FINISH, REMARKS	NO.	MATERIAL	FINISH, REMARKS
			1	POLYAMIDE	BLACK, UL94V-0

CODE NO.(OLD)	DRAWN	DESIGNED	CHECKED	APPROVED	RELEASED
CL	J. Denpouya '04.03.08	J. Denpouya '04.03.08	T. Miyazaki '04.03.08	T. Ono 04.03.09	. .

SCALE 5 : 1	DRAWING NO. EDC3-162330-01	PART NO. DF3-*EP-2C
UNITS mm	HRS HIROSE ELECTRIC CO., LTD	CODE NO. CL543- 1/1

FORM NO.229

TO