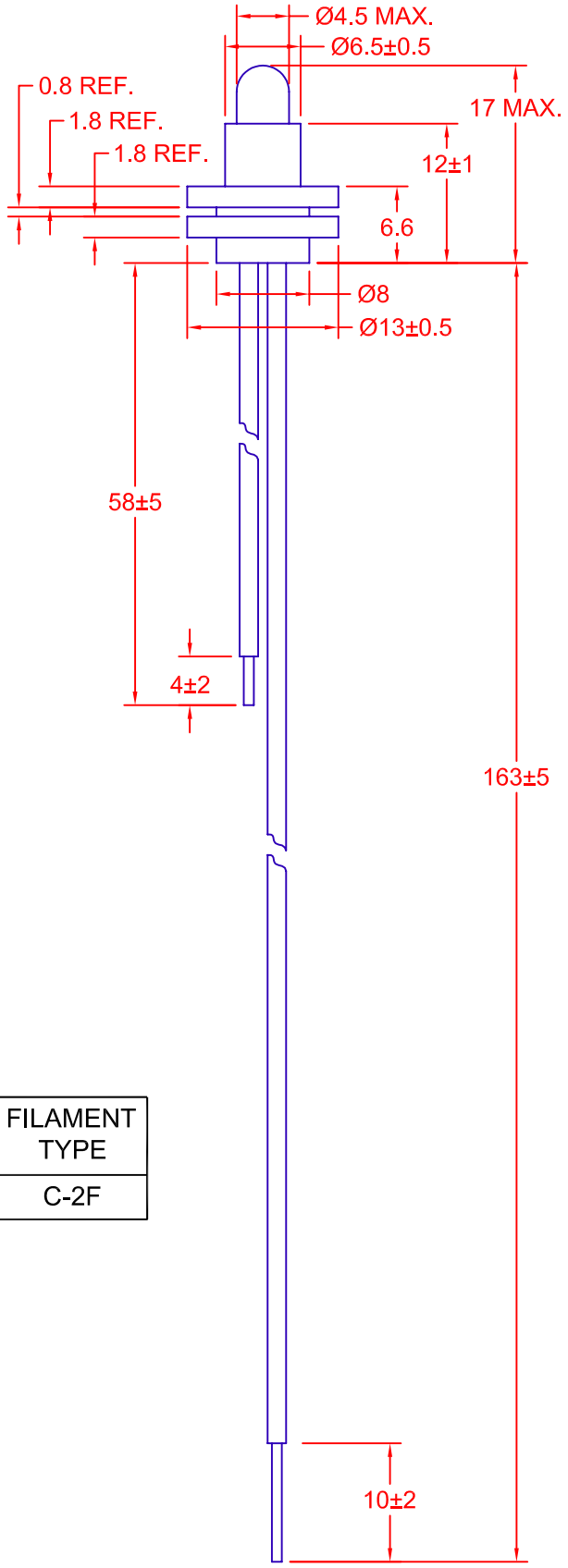

JKL PART NO.: FL25003A-627-22

JKL LAMP NUMBER	VOLTS RATED	AMPS ±10%	MSCP ±25%	LUMENS ±25%	AVERAGE LIFE HRS.	FILAMENT TYPE
627	28.0	.040	.320	4.02	2,500	C-2F

HOUSING:
MATERIAL: NEOPRENE
COLOR: OFF WHITE

WIRE LEADS:
#22 AWG US STYLE
1007 (CSATR64)
STRANDED COPPER
80°C 300V

REV. NO.	DESCRIPTION/ECO NUMBER	APPV'D DATE
	ENGR. RELEASED TO CAD	9/13/06

METRIC
THIRD ANGLE PROJECTION

DIMENSIONS ARE IN MILLIMETERS
TOLERANCE UNLESS OTHERWISE SPECIFIED
1 PL +/- 0.2
2 PL +/- 0.20
ANGLE +/-

JKL COMPONENTS CORPORATION

TITLE: FLJ RUBBER GROMMET BASE FLYING LEAD LAMP

DRAWN BY	APPV'D BY	DATE	SIZE	FSCM NO.	DRAWING NO.
L. WENGSTROM	E.D.	9/13/06	A	55335	FL25003A-627-22

- CAD DRAWING -
MANUAL REVISIONS NOT PERMITTED

SCALE	RELEASED DATE	REVISION DATE	REV. NO.	SHEET
NONE	9/13/06			1 OF 1