PRODUCT NUMBER
71609–YXXZLF

- RoHS COMPATIBLE, SEE NOTE 6
- OPTIONAL LETTER
  A: PRODUCT PACKED IN TAPE & REEL, SEE TA856.
- NUMBER OF POSITIONS PER ROW: 02 TO 40.
- PLATING CODE
  3= 0.76µm GOLD ON CONTACT AREA.
  2µm MIN MATTE TIN ON TAIL.
  4= 2µm MIN MATTE TIN FULL PLATED
  8= 0.38µm GOLD ON CONTACT AREA.
  2µm MIN MATTE TIN ON TAIL.
  1.27µm Ni MIN UNDERPLATING

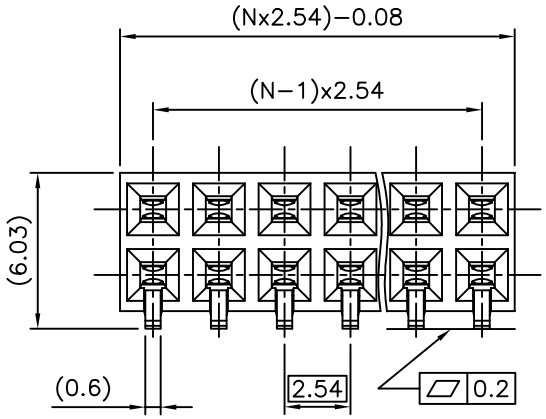


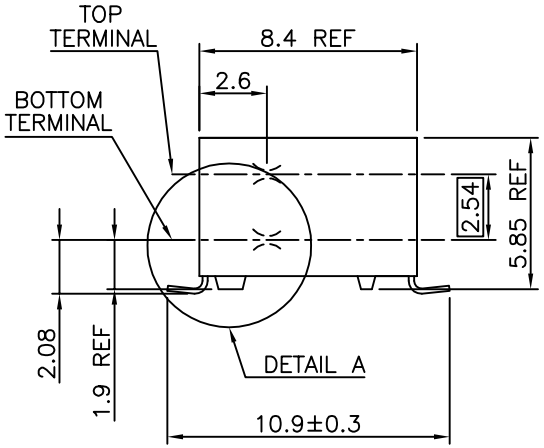


NOTES:

1 – HOUSING MAT'L: THERMOPLASTIC GLASS FILLED FLAME RETARDANT PER UL 94 V–0 COLOR: GREY.
2 – TERMINAL MATERIAL: PHOSPHOR BRONZE.
3 – 2 UP TO 4 POSITIONS PRODUCT PACKED IN PLASTIC BOX.
5 UP TO 40 POSITIONS PRODUCT PACKED IN TUBE.
4 – TO DETERMINE DIMENSIONS:
N = NUMBER OF POSITIONS PER ROW
EXAMPLE: 8 POS: (Nx2.54)–0.08=20.24 mm
5 – RECOMMENDED IR PROFIL PER TA 842.
6 – RoHS COMPATIBLE PRODUCT SPECIFICATIONS

a – PLATING:
– "LF" MEANS THE PRODUCT IS LEAD–FREE, 2µm MINIMUM MATTE TIN OVER 1.27µm MINIMUM NICKEL UNDERPLATE.

b – MANUFACTURING PROCESS COMPATIBILITY
– THE HOUSING WILL WITHSTAND EXPOSURE TO 260°C PEAK TEMPERATURE FOR 30 SECONDS MAX IN A CONVECTION, INFRA–RED OR VAPOR PHASE OR REFLOW OVEN.

c – LABELING:
– MEETS PACKAGING SPECS AS PER GS–14–920

d – LEGAL STATEMENT: SEE GS–47–0004

SCALE 2.5:1

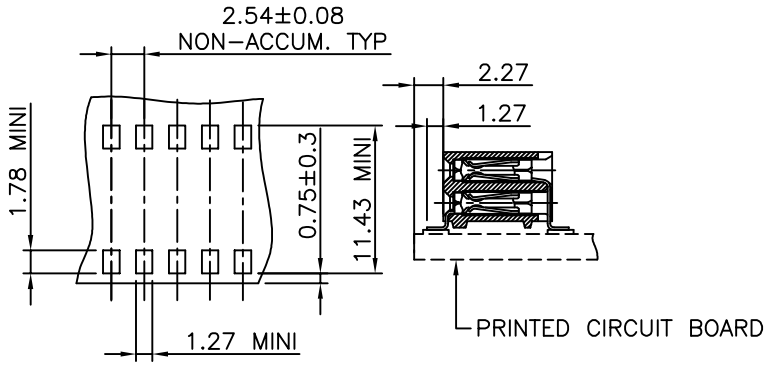


RECOMMENDED HOLE PATTERN

DETAIL A
SCALE 20:1

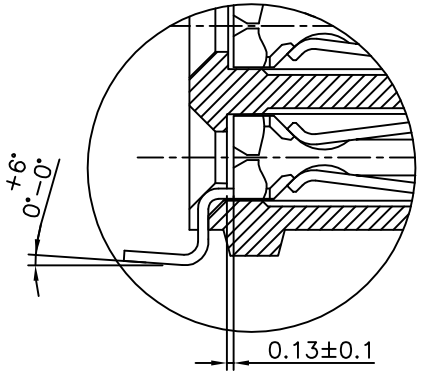


| mat'l. code | | | | surface | | tolerance | | projection | product family |
|---|---|---|---|---|---|---|---|---|---|
| SEE NOTE 1 | | | | ISO 1302 | | ISO 406 ISO 1101 | | | DUBOX |
| ltr | ecn no | dr | date | tolerances unless otherwise specified | | | | | title |
| W | F04–0347 | DLE | 04.11.08 | angles | linear | ±0.3 | | mm | BtB RECEPT. |
| X | F06–0204 | DLE | 06.06.10 | | | | | | HORIZ DR SMT |
| Y | B–17361 | JCO | 14.01.04 | ±2° | | | | scale 10:1 | |
| AA | B–19123 | LMU | 14.10.21 | dr | P.NIZZI | | 94.03.21 | | dwg no 71609 — sheet 1 of 1 — size A3 |
| | | | | engr | P NIZZI | | 99.06.08 | | |
| | | | | chr | JF NOTTEAU | | 97.05.13 | | |
| | | | | appd | PNZ | | 99.06.08 | | type CUSTOMER Drawing |
| sheet index | revision sheet | | | | | | | | |

form: A3

Copyright FCI
FCIconnect.com
PDS: Rev :AA STATUS:Released Printed: Oct 29, 2014