P/N	APPLICABLE NOTE(S)	(Ø A)
-1CCSF	1,2,3	.116
-2CCSF	1,2,3	.120
-3CCSF	1,2,3	.125

REVISIONS

ZONE	REV	DESCRIPTION	DATE	BY
-	D	ECO 12657	12.04.00	P.MAO

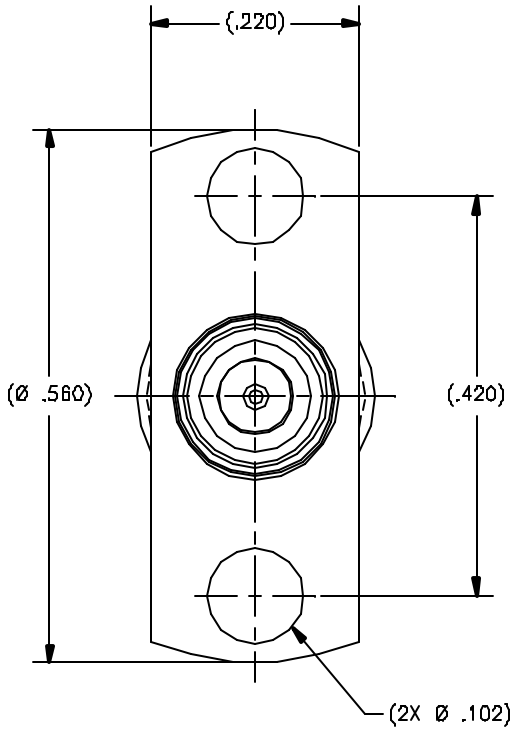

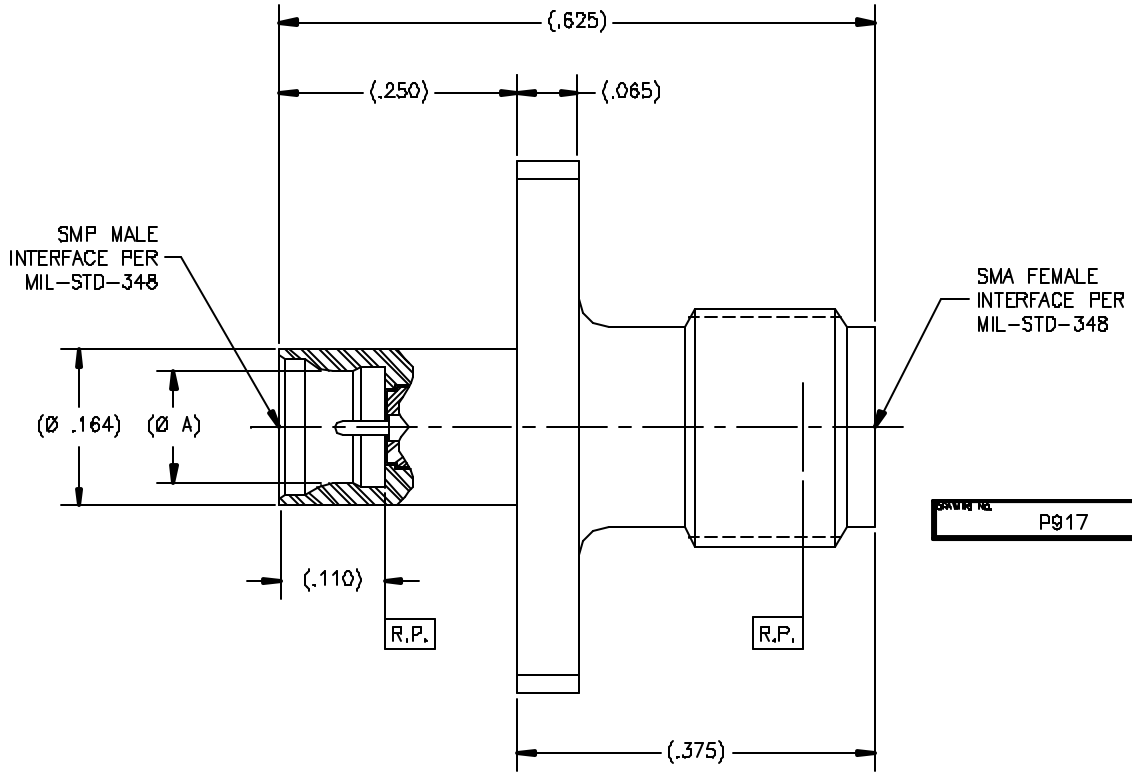

DRAWING NO. P917 REV. D

NOTE(S):

1. MATERIAL(S):
   1.1 BODY: 303 SST PER ASTM A-582
   1.2 CENTER CONDUCTOR: BeCu ALLOY PER ASTM B-196 OR B-197
   1.3 INSULATOR: PTFE PER ASTM D-1710
2. FINISH(ES):
   2.1 BODY: PASSIVATE PER ASTM A-967
   2.2 CENTER CONDUCTOR: GOLD PLATE PER ASTM B-488 OVER NICKEL PLATE PER AMS-QQ-N-290
   2.3 INSULATOR: NONE
3. ELECTRICAL PERFORMANCE(S):
   3.1 FREQUENCY RANGE: DC-18.0 GHz.
   3.2 R.F. INSERTION LOSS: 0.25dB Max to 18.0 GHz.
   3.3 VSWR: 1.15:1 Max to 18.0 GHz.

NOTICE
THIS DRAWING INCLUDES A CONFIDENTIAL, PROPRIETARY DESIGN GENERATED BY TENSOLITE COMPANY AND ALL DESIGN, MANUFACTURING REPRODUCTION, USE AND SALE RIGHTS REGARDING THE SAME ARE EXPRESSLY RESERVED. IT IS SUBMITTED UNDER A CONFIDENTIAL RELATIONSHIP FOR A SPECIFIC PURPOSE AND THE RECIPIENT AGREES BY ACCEPTING THE DRAWING NOT TO COPY OR DISCLOSE ANY INFORMATION REGARDING IT TO ANY UNAUTHORIZED PERSON TO INCORPORATE IN OTHER PRODUCTS ANY SPECIAL FEATURES PECULIAR TO THIS DESIGN. ALL PATENT RIGHTS HEREIN ARE EXPRESSLY RESERVED BY TENSOLITE COMPANY, LONG BEACH, CALIFORNIA 90815.

TOLERANCES AND NOTES EXCEPT AS NOTED
DIMENSIONS ARE IN INCHES
LINEAR .XX ±.010 .XXX ±.005 ANGULAR ± 1/2°
FRACTION ± 1/32
1. MACHINE FINISH 63 RMS
2. BREAK ALL SHARP EDGES .003 MAX.
3. MACHINED FILLETS .005 MAX.
4. MACHINED SURFACES SQUARE TO RESPECTIVE AXIS WITHIN .005 INCHES PER INCH.
5. MACHINED DIAMETERS CONCENTRIC WITHIN .001 T.I.R.
6. DIMENSIONS TO BE MET BEFORE PLATING.
7. CHAMFER ALL THREADS 45°.
8. THREADS PER H-28.
9. REMOVE FRAYED EDGES ON TEFLON.
10. REMOVE ALL BURRS.

SEE NOTES	-	SEE NOTES	-
MATERIAL	SIZE	FINISH	PROCUREMENT

NEXT ASSY

APPROVAL	INITIALS	DATE
DRAWN BY	P.MAO	12.04.00
CHECKED	P.MAO	12.04.00
QUALITY		
ENGINEERING	ATV	12.04.00

Tensolite
HIGH PERFORMANCE CABLES & INTERCONNECT SYSTEMS
Long Beach, California 90815

TITLE
SMP MALE TO SMA FEMALE
2 HOLE FLANGE MOUNT, ADAPTER

SCALE 10:1 | SUB-DIRECTORY\FILENAME _OLPXXX\OLP917 | SHEET 1 OF 1

SIZE C | CODE IDENT 30990 | DRAWING NO. P917 | REV. D