NOTES:
1. MATERIALS AND FINISHES:
   BODY,HEX NUT,LOCK WASHER - BRASS, NICKEL PLATING
   CONTACT - BERYLLIUM COPPER, GOLD PLATING
   INSULATOR - PTFE

2. ELECTRICAL:
   A. IMPEDANCE: 50 OHM
   B. FREQUENCY RANGE: DC - 2 GHz
   C. DIELECTRIC WITHSTANDING VOLTAGE:1500 VRMS, MIN.

3. MECHANICAL:
   A. DURABILITY: 500 CYCLES MIN.
   B. TEMPERATURE RANGE: -65° C TO 165° C

4. PACKAGING:
   A. QUANTITY: SINGLE PACK
   B. MARKING: BAG TO BE MARKED
      "AMPHENOL RF,31-80910,AND DATE CODE"

THIRD ANGLE PROJ.

| REVISIONS | | | | |
|---|---|---|---|---|
| REV | DESCRIPTION | DATE | ECO | APPR |
| A | RELEASE TO MFG | 17-Jun-09 | 47608 | SH |

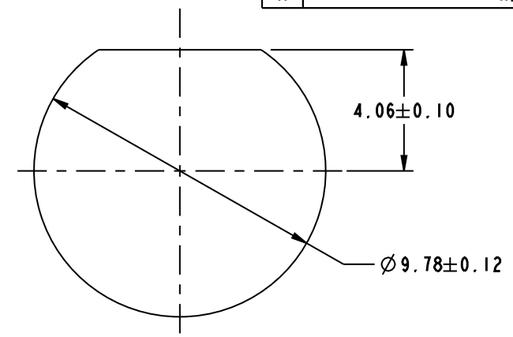


RECOMMENDED
MOUNTING HOLE

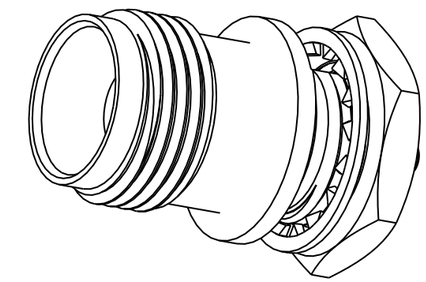

SCALE 3.000

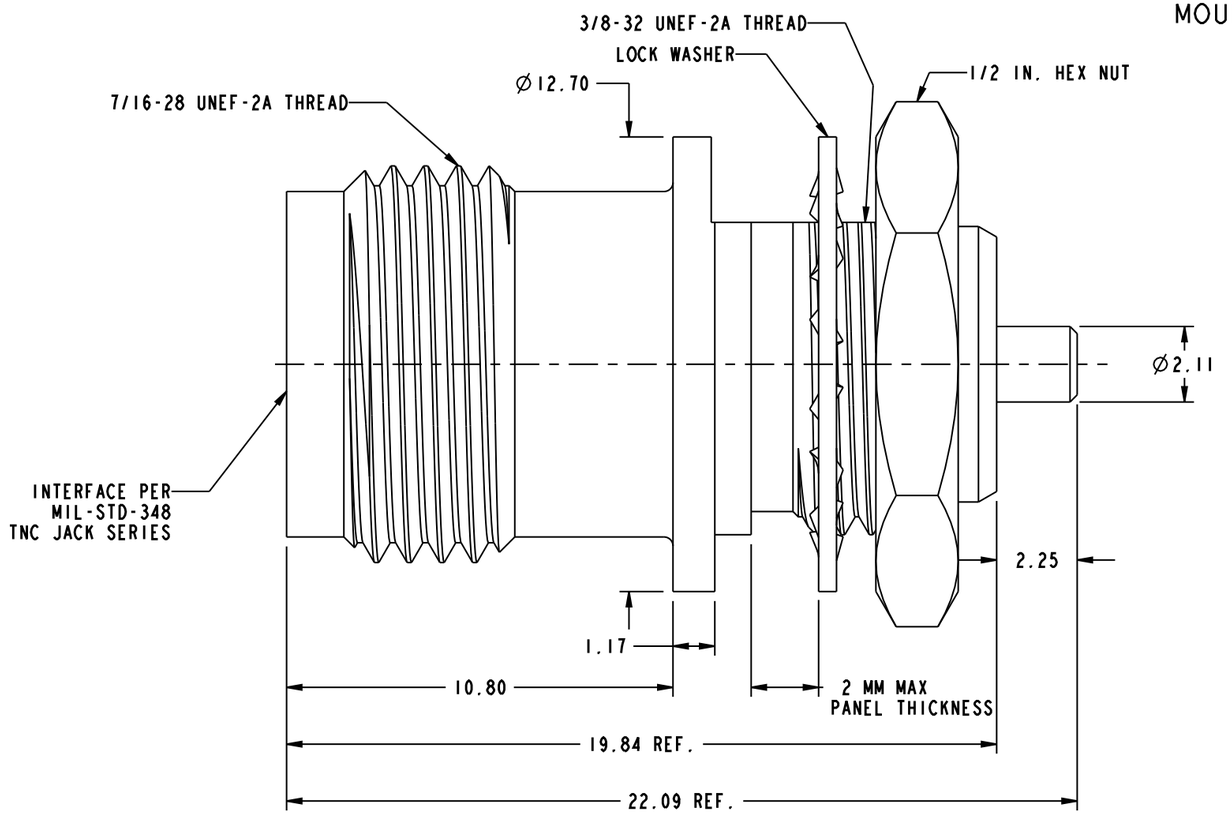


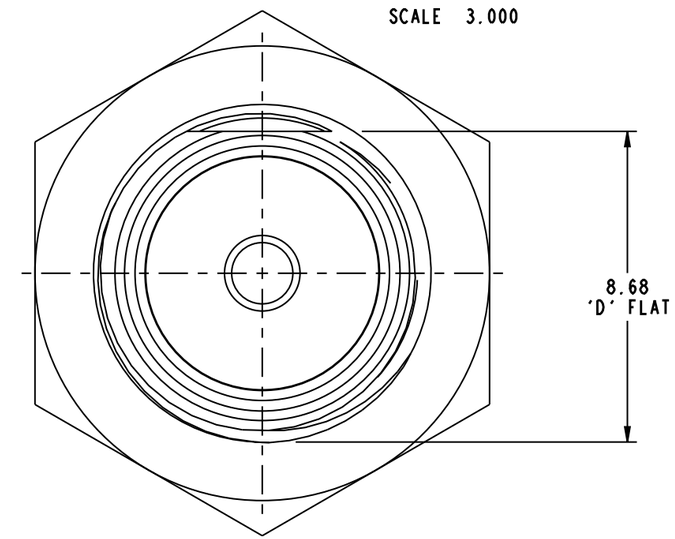


**CUSTOMER OUTLINE DRAWING**

ALL OTHER SHEETS ARE FOR INTERNAL USE ONLY

UNLESS OTHERWISE SPECIFIED, DIMENSIONS ARE IN METRIC AND TOLERANCES ARE:

| 0.5 - 6mm | 6 - 30mm | 30 - 120mm | ANGLES |
|---|---|---|---|
| ±0.1mm | ±0.2mm | ± 0.3mm | ±1° |

NOTICE - These drawings, specifications, or other data (1) are, and remain the property of Amphenol corp. (2) must be returned upon requiest; and (3) arre confidential and not to be disclosed to any person other than those to whom they are given by Amphenol Corp. the funishing of these drawings, specifications, or other data by Amphenol Corp., or to any other person to anyone for any purpose is not to be regarded by implicatioin or otherwise in any manner licensing, granting rights to permitting such holder or any other sperson to manufacture, use or sell any product, process or design, patented or otherwsie, that may in any way be related to or disclosed by said drawings, specifications, or other data.

MATERIAL
SEE NOTES

REFERENCE
EAR:3546

CONFIGURATION LEVEL: Prototype

FINISH

| | | |
|---|---|---|
| DRAWN J.CHENG | DATE 17-Jun-09 | |
| ENGINEER R.RAJAN | DATE 20-May-09 | |
| APPROVED S.HSIEH | DATE 17-Jun-09 | |
| CAD FILE I:\TNC\31-80910 | | |

TITLE
TNC,STRAIGHT,JACK
RECEPTCALE

| SCALE: 6.0:1.0 | SHEET 2 OF 2 | |
|---|---|---|
| DWG SIZE | CODE ID | REV |
| B | 74868 | A |

Amphenol RF
Danbury CT USA, Tainan, Taiwan, Shenzhen, China
www.amphenolrf.com

DRAWING NO. 31-80910
ITEM NO. 31-80910
PART NO. 31-80910