6 TO 24 VDC UNIPOLAR SOURCING DEVICE

103SR12S-2

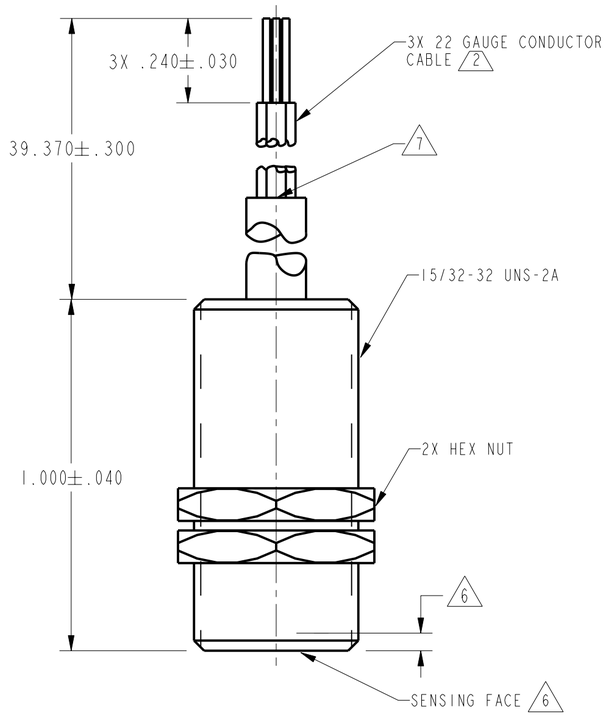

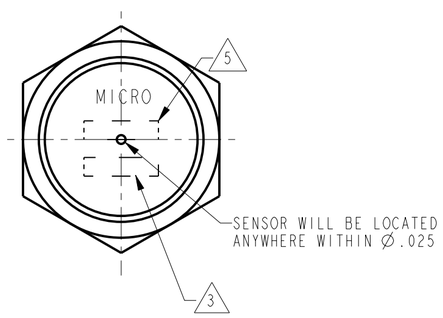

FIG. 1

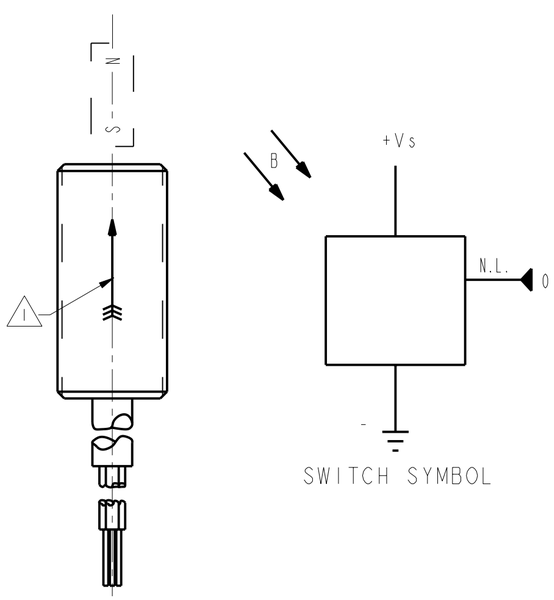

FIG. 2
OPERATE

SWITCH SYMBOL

OPERATING CHARACTERISTICS 1 4

GAUSS	
OPERATE MAX	495
RELEASE MIN	120
DIFF MIN	40

ABSOLUTE MAXIMUM RATINGS

SUPPLY VOLTAGE (Vs)	-1.2 VDC +24.0 VDC
VOLTAGE EXTERNALLY APPLIED TO OUTPUT	+6.5 VOLTS DC MAX WITH SWITCH IN "OFF" CONDITION ONLY (Vs+4) VOLTS MAX WITH SWITCH IN "ON" CONDITION
OUTPUT CURRENT	40 mA (SOURCE PER OUTPUT)
TEMPERATURE OPERATE AND STORAGE	-40° C TO 100° C
MAGNETIC FLUX	NO LIMIT, THE CIRCUIT CANNOT BE DAMAGED BY MAGNETIC OVERDRIVE

ELECTRICAL CHARACTERISTICS

	MIN	TYP	MAX	REMARKS
SUPPLY CURRENT 4		3mA 5mA	6.5mA 10.0mA	Vs=6V OFF CONDITION 8 Vs=16V
OUTPUT VOLTAGE (OPERATED)	Vs-2V	Vs-1.5V		SOURCING 20 mA PER OUTPUT 8
OUTPUT LEAKAGE CURRENT (RELEASED)			20μ A	LEAKAGE INTO SWITCH OUTPUT
OUTPUT SWITCHING TIME (SOURCING 20 mA) RISE TIME 4 FALL TIME		 0.2μ SEC 0.1μ SEC	 1.5μ SEC 0.5 μSEC	 10% TO 90% 90% TO 10%

NOTE: THIS DEVICE IS NOT PROTECTED AGAINST HIGH ELECTRICAL NOISE. IF ERRATIC OPERATION OCCURS AFTER INSTALLATION, INSTALL A CAPACITOR ACROSS THE INPUT TERMINALS (0.1 MFD). IF ERRATIC OPERATION CONTINUES, YOU MAY HAVE TO USE THE INDUSTRIAL DEVICES THAT MICRO SWITCH MANUFACTURES. PLEASE CONTACT YOUR LOCAL FIELD REPRESENTATIVE FOR INFORMATION.

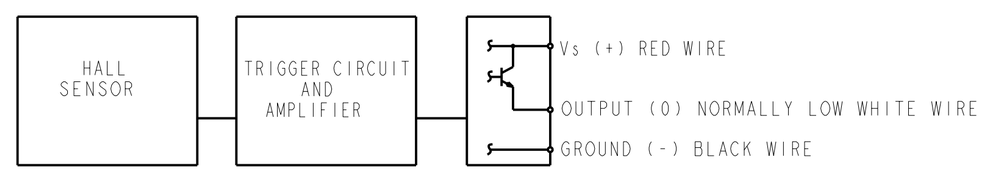

BLOCK DIAGRAM SHOWING CURRENT SOURCING OUTPUTS

NOTES
1. FLUX ENTERING THE SOUTH POLE OF THE MAGNET WILL OPERATE THE SENSOR WHEN MAGNET IS POSITIONED AS SHOWN IN FIGURE 2. THIS ASSUMES THE CONVENTION THAT THE DIRECTION OF THE EXTERNAL FLUX OF A MAGNET IS FROM THE NORTH TO THE SOUTH POLE OF THE MAGNET
2. 22 GAUGE PVC INSULATED CONDUCTORS WITH A MOLDED PVC JACKET
3. DATE CODE LOCATED IN THIS AREA
4. FROM -40°C TO 100°C AND 6 TO 24 VOLTS
5. CATALOG LISTING LOCATED IN THIS AREA
6. SENSITIVE AREA IS LOCATED .050 BEHIND THE SENSING FACE
7. JACKET IS CUT BACK 1.37 INCHES FROM FREE END OF LEADS
8. Vs IS THE UNREGULATED SUPPLY VOLTAGE

THIS DRAWING COVERS A PROPRIETARY ITEM AND IS THE PROPERTY OF MICRO SWITCH. A DIVISION OF HONEYWELL. THIS DRAWING IS NOT TO BE COPIED OR USED WITHOUT THE APPROVAL OF MICRO SWITCH.

MICRO SWITCH a Honeywell Division
FED. MFG. CODE 91929

MAGNETICALLY OPERATED CYLINDRICAL HALL SWITCH

CATALOG LISTING
103SR12S-2

THIRD ANGLE PROJECTION
SCALE 3 : 1
DO NOT SCALE PRINT

UNLESS OTHERWISE SPECIFIED TOLERANCES ARE

ONE PLACE	(.0)	±.030
TWO PLACES	(.00)	±.015
THREE PLACES	(.000)	±.005
ANGLES		±

WEIGHT

ANSI Y14.5M-1982 APPLIES

103SR12S-2 | REPLACES - | PAGE 1 OF 1 | RELEASE NO. PR-21786 | DRAWING NUMBER | ISSUE 4 | CHECK | REVISIONS A 205733 DLT 30 MAY 02 | CHECK | 30 MAY 02 | SAV | CHECK | 30 MAY 02 | DRAWN DLT 30 MAY 02 | PTC/CAD 2D