SLE-24 SERIES

Constant Current LED Driver

DANUBE

FEATURES

- EFFICIENCY UP TO 95%
- CONSTANT CURRENT LED DRIVER
- WIDE INPUT AND OUTPUT VOLTAGE RANGE
- INPUT VOLTAGE UP TO 36V
- PWM DIMMING CONTROL
- SHORT CIRCUIT AND OVERTEMPERATURE PROTECTED
- INTERNAL SMD TECHNOLOGY
- FULLY ISOLATED PLASTIC CASE WITH IP67 LEVEL
- UL 94V-0 PACKAGE MATERIAL
- RoHS COMPLIANT
- 3 YEARS WARRANTY

IP67

● DESCRIPTION

SLE-24 series is a high efficiency, constant current and step-down DC/DC converter. The LED DRIVER operates from an input voltage 9Vdc to 36Vdc and provides an externally adjustable output current of up to 700mA and output power up to 22 watts. It is able to include the function of Over temperature protection(OTP), Over current protection(OCP), PWM/Digital Dimming and ON/OFF.

The device can extensively be used for Landscape illumination, Special illumination, Back light source, Commercial illumination, Street light illumination, Home use illumination and Automobile illumination etc.

● SELECTION GUIDE

MODEL NUMBER	INPUT NOMINAL VOLTAGE (VDC)	INPUT VOLTAGE RANGE (VDC)	OUTPUT VOLTAGE RANGE (VDC)	OUTPUT CURRENT RANGE (mA)	DIMMING CONTROL	EFF (%, typ.)
SLE-24-0.30D(W)(N)	24	9-36	2-32	0-300	PWM	95
SLE-24-0.35D(W) (N)	24	9-36	2-32	0-350	PWM	95
SLE-24-0.50D(W) (N)	24	9-36	2-32	0-500	PWM	95
SLE-24-0.60D(W) (N)	24	9-36	2-32	0-600	PWM	95
SLE-24-0.70D(W) (N)	24	9-36	2-32	0-700	PWM	95
SLE-24-0.30S	24	9-32	2-28	0-300	PWM	95
SLE-24-0.35S	24	9-32	2-28	0-350	PWM	95
SLE-24-0.50S	24	9-32	2-28	0-500	PWM	95
SLE-24-0.60S	24	9-32	2-28	0-600	PWM	95
SLE-24-0.70S	24	9-32	2-28	0-700	PWM	95

● PARTNUMBES STRUCTURE

Series	Coding scheme	
SLE-24 Series	SLE-x1-x.x2y1zzz	SLE =Series Name x1 = Input voltage x.x2 =Output current y1 =Package Style(D=PINS,W=WIRED,S=SMD,N=NO DIM) zzz = 0~9，A~Z or blank for market purpose.

● SPECIFICATIONS

(typical at 25°C, nominal input voltage, rated output current unless otherwise specified)

Project	Working Condition	Min	Typ	Max	Unit
Input Voltage(absolute maximum)				36	VDC
Input Voltage(absolute maximum) For (S)				32	VDC
Recommended Input Voltage		9	24	36	VDC
Recommended Input Voltage(S)		9	24	32	VDC
Input Filter		Capacitor			
Output Voltage range	Vin=36V	2		32	VDC
Output Voltage range(S)	Vin=32V	2		28	VDC
Output Current Accuracy	Vin=24V,6LEDS		±4	±6	%
Output Current Stability	Vin=24V,1LED to 6LEDS		±4	±6	%
Humidity	PINS, WIRE	20		95	%
Humidity	SMD	20		85	%
Maximum Capacitive Load				2.2	uF
Operating Frequency		40		1000	KHz
Short Circuit Protection		Continuous			
Temperature Coefficient	-40°C~+71°C ambient			±0.03	%°C
Operating Temperature	300mA/350mA/500mA	-40		85	°C
	600mA/700mA	-40		71	°C
Storage Temperature		-55		125	°C
Overtemperature Shutdown (Auto-restart after cool down)	Internal IC Temperature		150		°C
	Temperature Hysteresis		20		°C
Maximum Case Temperature				100	°C
MTBF (using MIL-HDBK 217F)	Operating Temperature 25°C	2000000			Hours
Case Material		Non Conductive plastic			
Potting Material		Epoxy (UL94V-0)			

roject	Working Condition	Min	Typ	Max	Unit
Case Size		22.6*9.9*8.9			mm
Case Size(S)		25.4*10.5*9.3			mm
Weight(P)			4		g
Weight (W)			7.3		g
Weight(S)			3.4		g
EMI Radiated Emissions		EN55015			
Dust Test & Waterproof Test(D) (W)		IP67			

● PWM DIMMING AND ON/OFF CONTROL(Leave open if not use)

Project	Working Condition	Min	Typ	Max	Unit
ON/OFF Control	ON	3.5	FLOAT	10	VDC
	OFF	0		0.5	VDC
Quiescent Input Current in Shutdown Mode	Vin=24			1	mA
PWM Frequency	For Linear Operation (measured 1%~99% Dimming)	100		1K	Hz

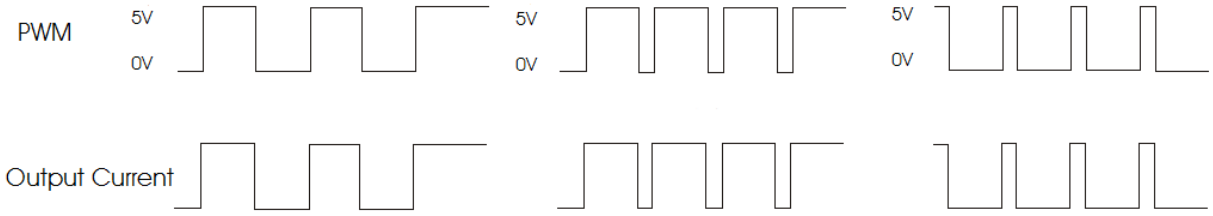

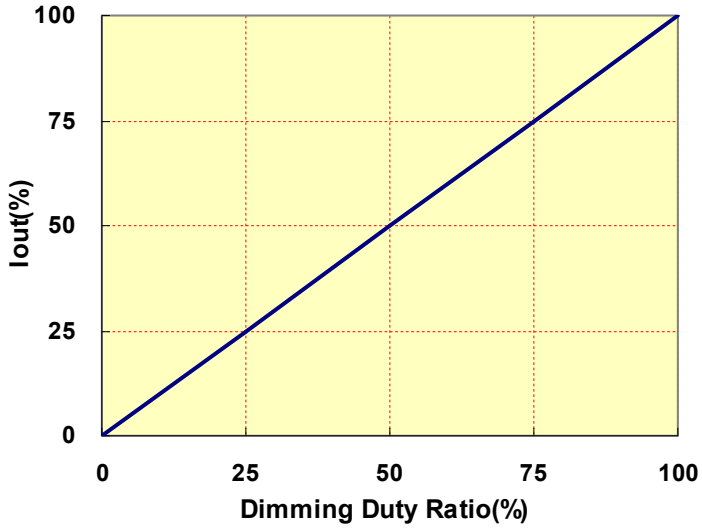

Fig.1 Dimming Duty Cycle:0%-100%

The dimming of LEDs can be performed by applying PWM signals to DIM pin.
The following Fig.1 show good linearity in dimming application of ***SLE-24***.
A logic low(below 0.5V) at DIM PIN will disable the device and shut off the current flow to the LED array.

● SIMPLIFIED SCHEMATIC

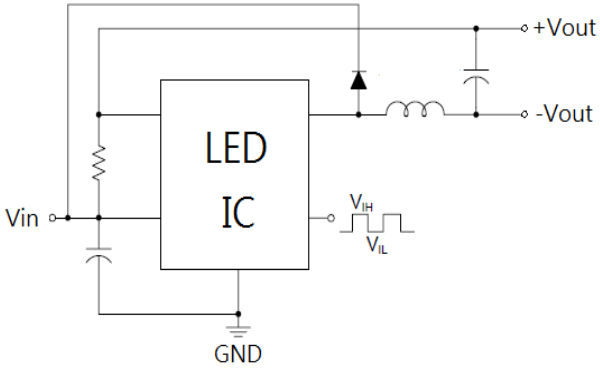

● TYPICAL APPLICATIONS

PWM Dimming control circuit

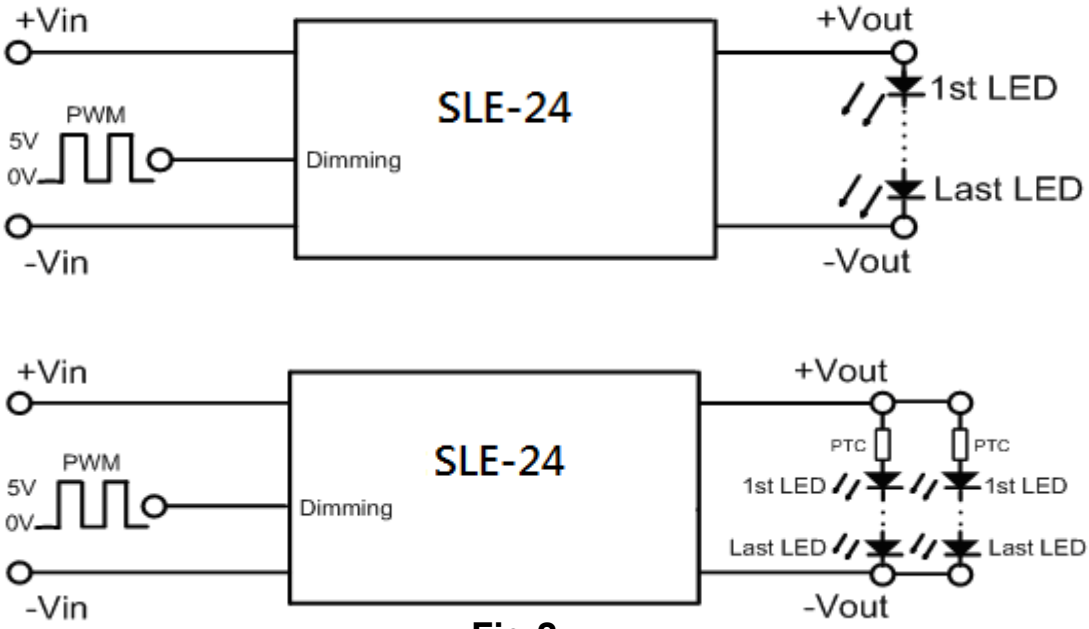

Fig.2

In actual use, if necessary to protect LED, a PTC of positive temperature coefficient may be connect to the input end of every channel or all channels, as shown in Fig.2.

● EFFICIENCY VS. LOAD LED T_A=25℃

1-LED V_F=3.6V; 2-LED V_F=7.2V; 3-LED V_F=10.8V

OUTPUT CURRENT 0.30A

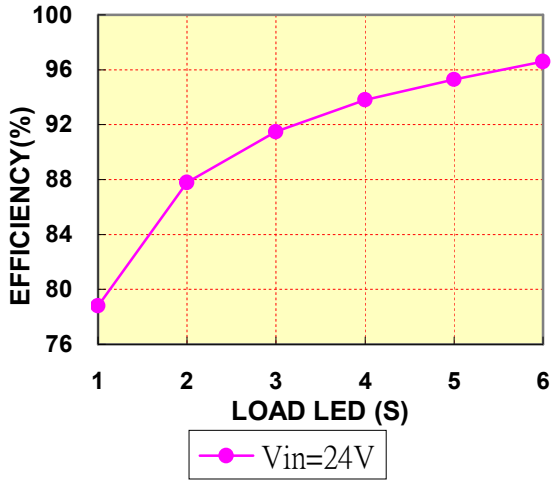

EFFICIENCY VS. LOAD LED 0.35A

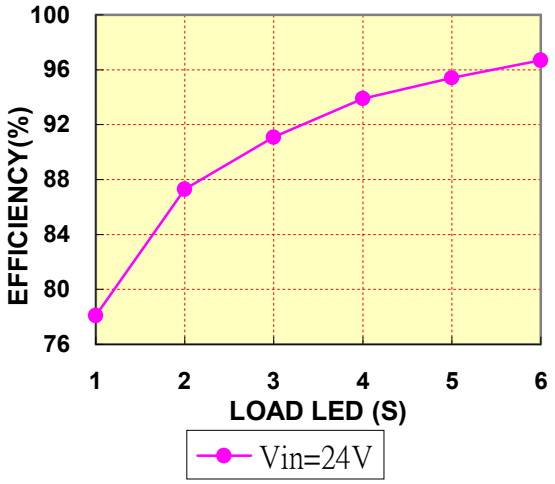

OUTPUT CURRENT 0.50A

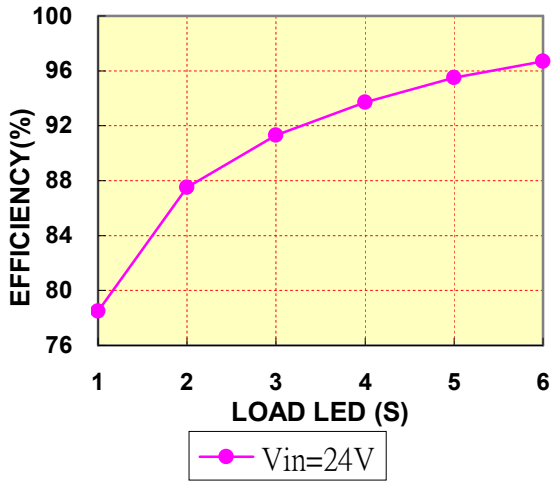

OUTPUT CURRENT 0.60A

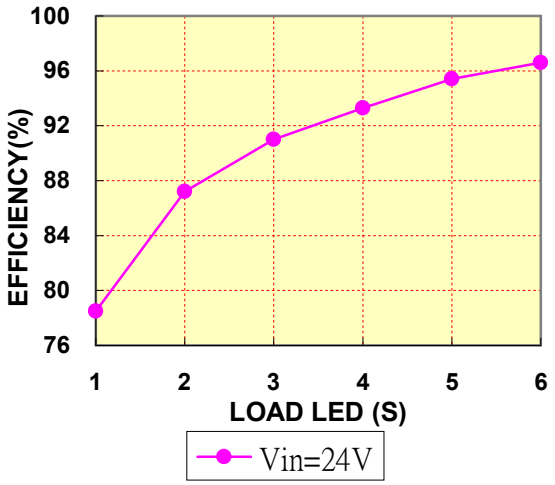

OUTPUT CURRENT 0.70A

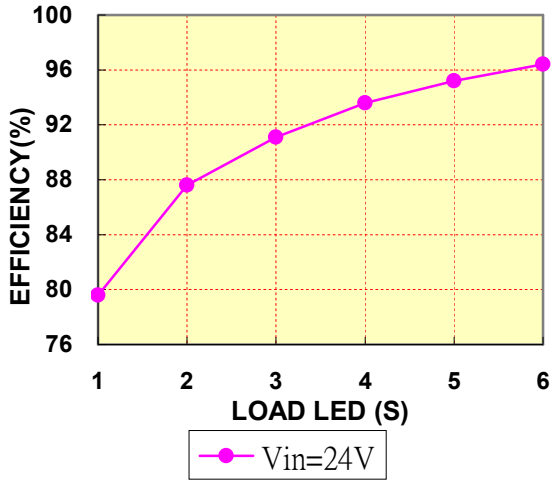

● DERATING CURVE

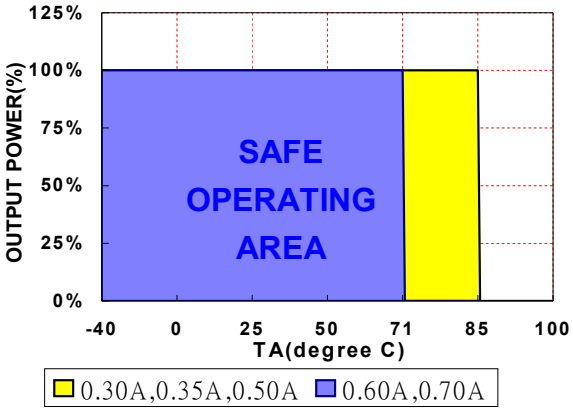

● MECHANICAL DIMENSIONS
RECOMMENDED FOOTPRINT DETAILS

PACKAGE D

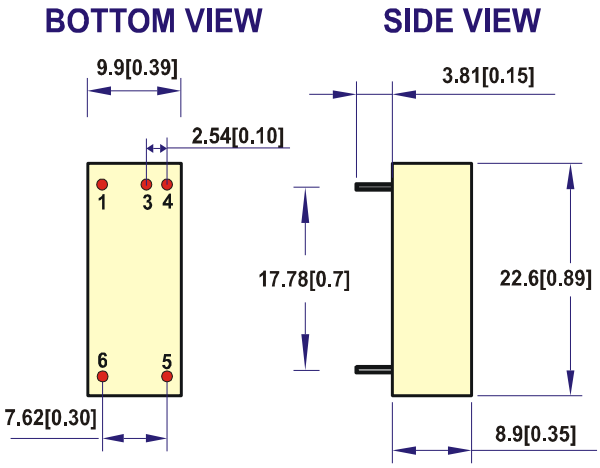

All dimensions are in mm[inches]

PIN	OUT	COMMENT
1	+Vin	DC Supply
3	PWM DIM	ON/OFF/PWM Dimming Leave open if not used
4	-Vin	Don't connect to -Vout
5	-Vout	LED – Connection
6	+Vout	LED + Connection

NOTE:

Pin Size is Tolerance 0.60Φ ±0.05mm

All Dimensions In mm(Inches)

Tolerance .X or .XX= ±0.5mm

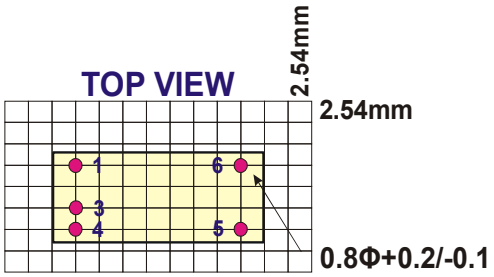

PACKAGE DN

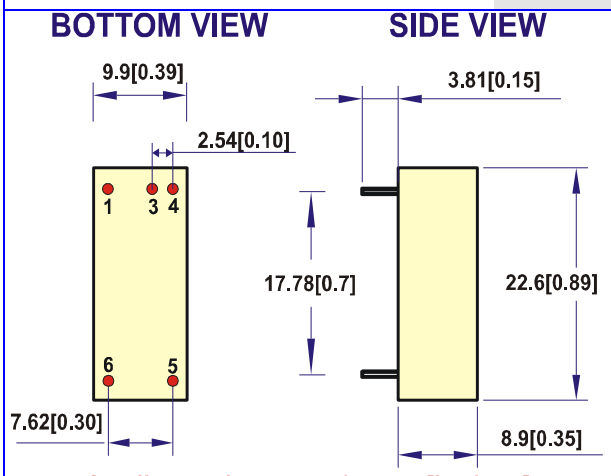

All dimensions are in mm[inches]

PIN	OUT	COMMENT
1	+Vin	DC Supply
3	NP	NP
4	-Vin	Don't connect to -Vout
5	-Vout	LED – Connection
6	+Vout	LED + Connection

NOTE:

Pin Size is Tolerance 0.60Φ ±0.05mm

All Dimensions In mm(Inches)

Tolerance .X or .XX= ±0.5mm

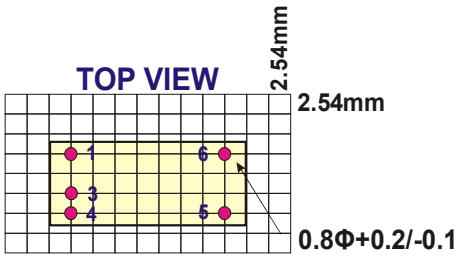

PACKAGE W

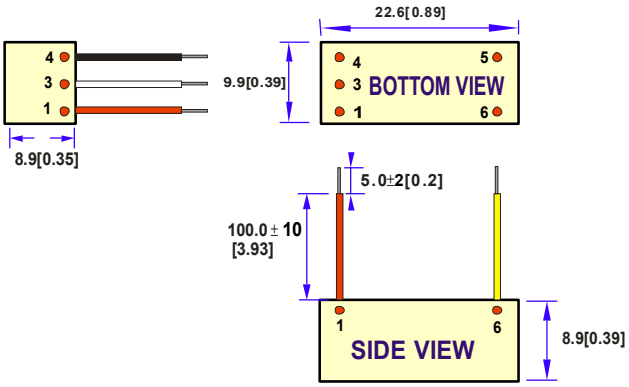

All dimensions are in mm[inches]

PIN	OUT	COMMENT
1 (Red)	+Vin	DC Supply
3 (White)	PWM DIM	ON/OFF/PWM Dimming Leave open if not used
4 (Black)	-Vin	Don't connect to -Vout
5 (Blue)	-Vout	LED – Connection
6 (Yellow)	+Vout	LED + Connection

NOTE:

All dimensions in mm(Inches)

1.Case Tolerance .X or .XX=±0.5mm

2.Wire outside diameter=1.6mm ±0.1

3.Wire core diameter= 0.75mm ±0.1

4.Wire is UL 3385/CAS TEM listed #22AWG /300V /105℃ Rated

PACKAGE WN

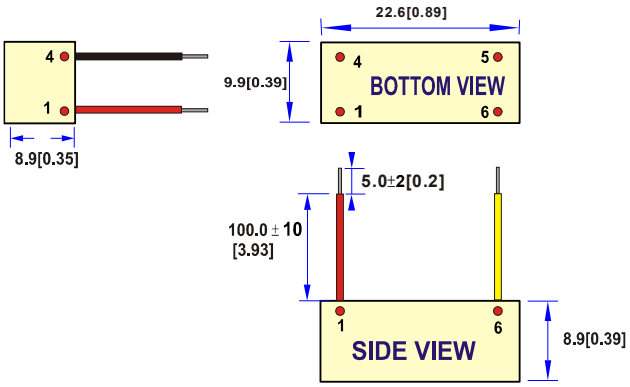

All dimensions are in mm[inches]

PIN	OUT	COMMENT
1 (Red)	+Vin	DC Supply
4 (Black)	-Vin	Don't connect to -Vout
5 (Blue)	-Vout	LED – Connection
6 (Yellow)	+Vout	LED + Connection

NOTE:

All dimensions in mm(Inches)

1.Case Tolerance .X or .XX=±0.5mm

2.Wire outside diameter=1.6mm ±0.1

3.Wire core diameter= 0.75mm ±0.1

4.Wire is UL 3385/CAS TEM listed #22AWG /300V /105℃ Rated

PACKAGE S

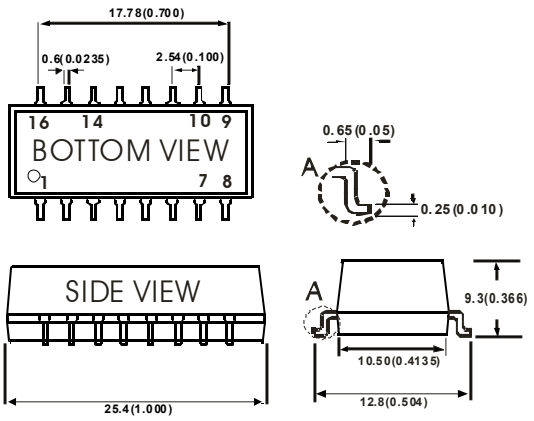

Unit: mm(inch)+/-0.25(0.010)

PIN	OUT	COMMENT
1	+Vin	DC Supply
14	PWM DIM	ON/OFF/PWM Dimming Leave open if not used
16	-Vin	Don't connect to -Vout
9 & 10	-Vout	LED – Connection
7 & 8	+Vout	LED + Connection

NOTE:

Pin Size is Tolerance 0.6Φ ±0.05mm

All Dimensions In mm(Inches)

Tolerance .X or .XX= ±0.5mm

● RECOMMENDED FOOTPRINT DETAILS

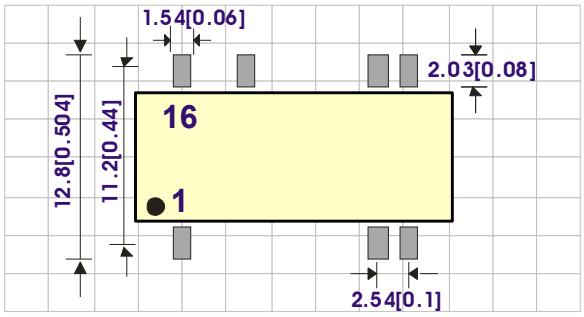

● RE-FLOW SOLDDERING PROFILE FOR MASS PRODUCTION

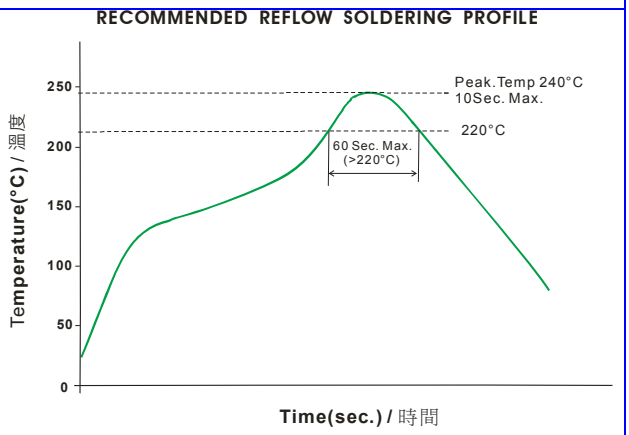

Remark:

The curve applies only to the hot air reflow soldering.

FOR MORE INFORMATION CALL:

Danube Enterprise Co., Ltd.

Tel: 886-7-3755165 **Fax: 886-7-3755330** **E-mail: danube@ms10.hinet.net**

Home Page **http://www.danube.com.tw**