THIS DRAWING IS UNPUBLISHED. RELEASED FOR PUBLICATION -.- .
© COPYRIGHT - BY TYCO ELECTRONICS CORPORATION. ALL RIGHTS RESERVED.

LOC	DIST
GP	00

REVISIONS

P	LTR	DESCRIPTION	DATE	DWN	APVD
	J	REVISED PER ECO-11-001216	08FEB2011	CJV	SLB

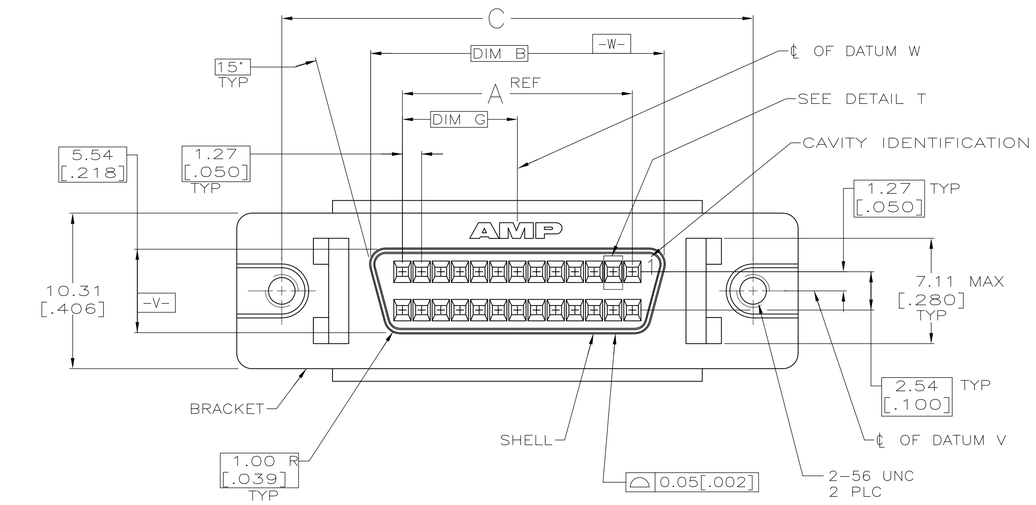

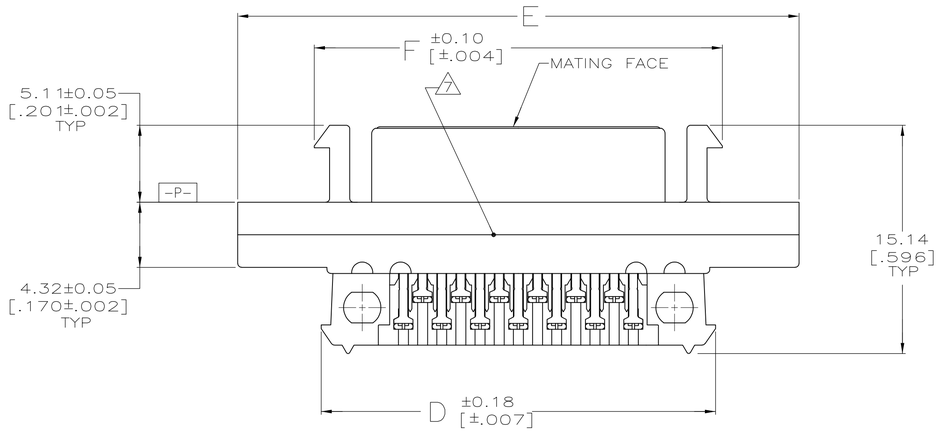

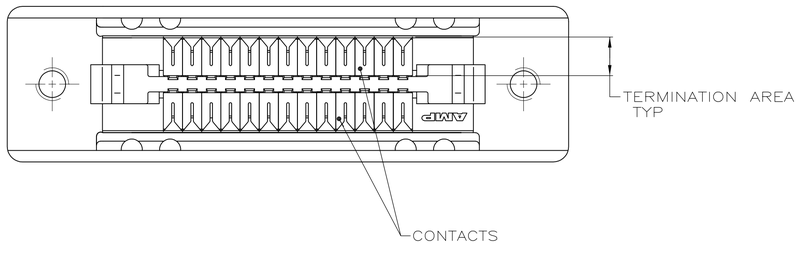

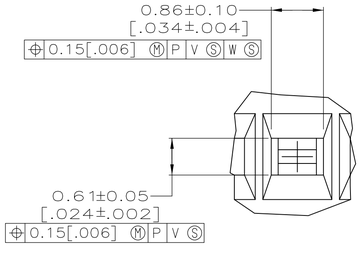

DETAIL T
SCALE 20:1
TYPICAL

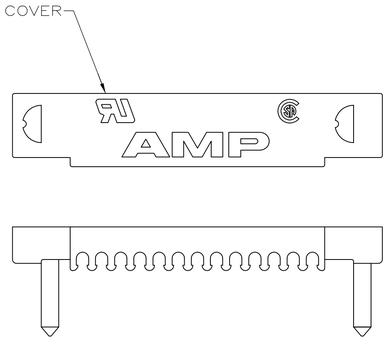

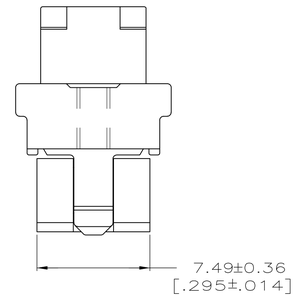

TERMINATED VIEW

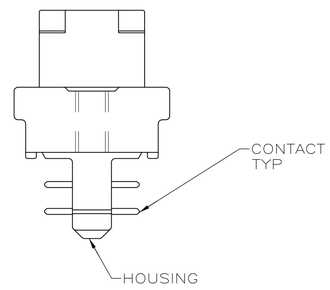

1. MATERIAL–
CONTACTS: PHOSPHOR BRONZE.
SHELL: CARBON STEEL.
HOUSING: POLYESTER, BLACK, UL 94V-0 RATED.
TERMINATING COVERS: POLYESTER, UL 94V-0 RATED, COLOR: SEE TABLE.
BRACKET: ZINC.

2. FINISH–
SHELL: 5.08μm [.000200] MIN NICKEL OVER 1.27μm [.000050] MIN COPPER.
BRACKET: 5.08μm [.000200] MIN NICKEL OVER 7.62μm [.000300] MIN COPPER.
CONTACTS: SEE TABLE

3. EITHER 0.76μm [.000030] MIN GOLD PLATE OR GOLD FLASH OVER PALLADIUM NICKEL PLATE, 0.76μm [.000030] MIN TOTAL FOR A LENGTH OF 0.64 [.025] MIN, 0.13 [.005] MAX FROM MATING END, 1.27μm [.000050] MIN TIN-LEAD IN TERMINATION AREA, ALL OVER 1.27μm [.000050] MIN NICKEL.

4. EITHER 0.76μm [.000030] MIN GOLD PLATE OR GOLD FLASH OVER PALLADIUM NICKEL PLATE, 0.76μm [.000030] MIN TOTAL FOR A LENGTH OF 0.64 [.025] MIN, 0.13 [.005] MAX FROM MATING END, 1.27μm [.000050] MIN TIN IN TERMINATION AREA, ALL OVER 1.27μm [.000050] MIN NICKEL.

5. RECOMMENDED WIRE: 28 AWG OR 30 AWG, SOLID OR 7 STRAND, PVC INSULATION, REFER TO TABLE BELOW FOR INSULATION DIA.

6. COVERS PACKAGED SEPARATE FROM CONNECTORS IN SAME SHIPPING CONTAINER.

7. DATE CODE THIS AREA, EITHER SIDE, SEE TABLE.

8. OBSOLETE PART NUMBER.

9. ROHS 2002/95/EC COMPLIANT

CONTACT FINISH	DATE CODE	TERMINATING COVERS COLOR	INSULATION OUTER DIA 5	G	F	E	D	C	B	A	NO OF POSN	PART NUMBER
4	YES	GRAY	0.74–0.79 DIA [.029–.031]	15.24 [.600]	42.29 [1.665]	52.45 [2.065]	41.38 [1.629]	46.48 [1.830]	34.70 [1.366]	30.48 [1.200]	50	9 6-786862-5
4	YES	BLACK	0.81–0.91 DIA [.032–.036]	15.24 [.600]	42.29 [1.665]	52.45 [2.065]	41.38 [1.629]	46.48 [1.830]	34.70 [1.366]	30.48 [1.200]	50	9 5-786862-5
3	NO	GRAY	0.74–0.79 DIA [.029–.031]	31.12 [1.225]	74.04 [2.915]	84.20 [3.315]	73.13 [2.879]	78.23 [3.080]	66.45 [2.616]	62.23 [2.450]	100	8 1-786862-9
3	NO	GRAY	0.74–0.79 DIA [.029–.031]	20.96 [.825]	53.72 [2.115]	63.88 [2.515]	52.81 [2.079]	57.91 [2.280]	46.13 [1.816]	41.91 [1.650]	68	8 1-786862-7
3	YES	GRAY	0.74–0.79 DIA [.029–.031]	15.24 [.600]	42.29 [1.665]	52.45 [2.065]	41.38 [1.629]	46.48 [1.830]	34.70 [1.366]	30.48 [1.200]	50	1-786862-5
3	NO	GRAY	0.74–0.79 DIA [.029–.031]	7.62 [.300]	27.05 [1.065]	37.21 [1.465]	26.14 [1.029]	31.24 [1.230]	19.46 [.766]	15.24 [.600]	26	8 1-786862-2
3	NO	BLACK	0.81–0.91 DIA [.032–.036]	31.12 [1.225]	74.04 [2.915]	84.20 [3.315]	73.13 [2.879]	78.23 [3.080]	66.45 [2.616]	62.23 [2.450]	100	8 786862-9
3	NO	BLACK	0.81–0.91 DIA [.032–.036]	20.96 [.825]	53.72 [2.115]	63.88 [2.515]	52.81 [2.079]	57.91 [2.280]	46.13 [1.816]	41.91 [1.650]	68	8 786862-7
3	YES	BLACK	0.81–0.91 DIA [.032–.036]	15.24 [.600]	42.29 [1.665]	52.45 [2.065]	41.38 [1.629]	46.48 [1.830]	34.70 [1.366]	30.48 [1.200]	50	786862-5
3	NO	BLACK	0.81–0.91 DIA [.032–.036]	7.62 [.300]	27.05 [1.065]	37.21 [1.465]	26.14 [1.029]	31.24 [1.230]	19.46 [.766]	15.24 [.600]	26	8 786862-2

THIS DRAWING IS A CONTROLLED DOCUMENT.

DIMENSIONS: MM [INCHES]

TOLERANCES UNLESS OTHERWISE SPECIFIED:
0 PLC ± –
1 PLC ± –
2 PLC ± 0.13 [.005]
3 PLC ± –
4 PLC ± –
ANGLES ± –

MATERIAL 1
FINISH 2

DWN C.OBERMAN 04/29/93
CHK R.STONE 5-10-93
APVD J. OLSON 19DEC2005
PRODUCT SPEC 108-1228
APPLICATION SPEC 114-40029
WEIGHT –

Tyco Electronics
Tyco Electronics Corporation
Harrisburg, Pa 17105-3608

NAME
RECEPTACLE KIT, UNASSEMBLED, PANEL MOUNT, W/ WIRE TERMINATING COVER, W/ LATCH BLOCK,

SIZE	CAGE CODE	DRAWING NO	RESTRICTED TO
A1	00779	C-786862	–

CUSTOMER DRAWING
SCALE 5:1 SHEET 1 OF 1 REV J