- **1.8-V and 5-V Performance**
- **Low Offset (A Grade)**
  - **1.25 mV Max (25°C)**
  - **1.7 mV Max (–40°C to 125°C)**
- **Rail-to-Rail Output Swing**
- **Wide Common-Mode Input Voltage Range . . . –0.2 V to (V_+ – 0.5 V)**
- **Input Bias Current . . . 1 pA (Typ)**
- **Input Offset Voltage . . . 0.3 mV (Typ)**
- **Low Supply Current . . . 70 μA/Channel**
- **Low Shutdown Current . . . 10 pA (Typ) Per Channel**
- **Gain Bandwidth . . . 2.3 MHz (Typ)**
- **Slew Rate . . . 0.9 V/μs (Typ)**
- **Turn-On Time From Shutdown . . . 5 μs (Typ)**
- **Input Referred Voltage Noise (at 10 kHz) . . . 20 nV/√Hz**
- **ESD Protection Exceeds JESD 22**
  - **2000-V Human-Body Model (A114-A)**
  - **200-V Machine Model (A115-A)**
- **Applications**
  - **Cordless/Cellular Phones**
  - **Consumer Electronics (Laptops, PDAs)**
  - **Audio Pre-Amp for Voice**
  - **Portable/Battery-Powered Electronic Equipment**
  - **Supply Current Monitoring**
  - **Battery Monitoring**
  - **Buffers**
  - **Filters**
  - **Drivers**

TLV341
DBV (SOT-23) OR DCK (SC-70) PACKAGE
(TOP VIEW)

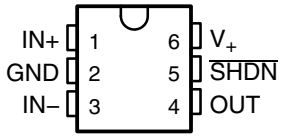

TLV341
DRL (SOT-563) PACKAGE
(TOP VIEW)

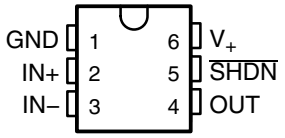

TLV342
D (SOIC) OR DGK (MSOP) PACKAGE
(TOP VIEW)

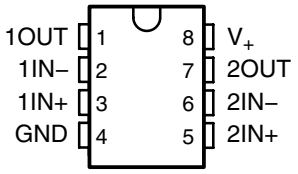

TLV342
RUG (QFN) PACKAGE
(TOP VIEW)

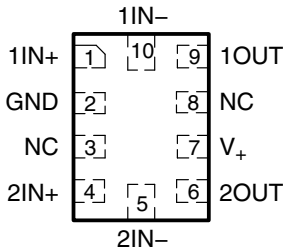

NC – No internal connection

TLV342S
RUG (QFN) PACKAGE
(TOP VIEW)

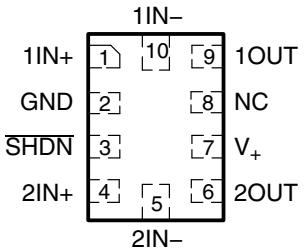

NC – No internal connection

TLV344
D (SOIC) OR PW (TSSOP) PACKAGE
(TOP VIEW)

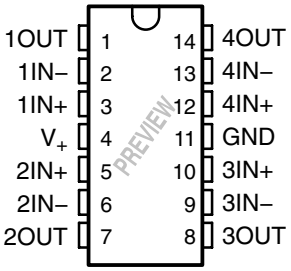

Please be aware that an important notice concerning availability, standard warranty, and use in critical applications of Texas Instruments semiconductor products and disclaimers thereto appears at the end of this data sheet.

PRODUCTION DATA information is current as of publication date. Products conform to specifications per the terms of Texas Instruments standard warranty. Production processing does not necessarily include testing of all parameters.

Copyright © 2007, Texas Instruments Incorporated

description/ordering information

The TLV341, TLV342, and TLV344 are single, dual, and quad CMOS operational amplifiers, respectively, with low-voltage, low-power, and rail-to-rail output swing capabilities. The PMOS input stage offers an ultra-low input bias current of 1 pA (typ) and an offset voltage of 0.3 mV (typ). For applications requiring excellent dc precision, the A grade (TLV34xA) has a low offset voltage of 1.25 mV (max) at 25°C.

These single-supply amplifiers are designed specifically for ultra-low-voltage (1.5-V to 5-V) operation, with a common-mode input voltage range that typically extends from –0.2 V to 0.5 V from the positive supply rail. Additional features include 20-nV/$\sqrt{\text{Hz}}$ voltage noise at 10 kHz, 2.3-MHz unity-gain bandwidth, and 0.9-V/µs slew rate.

The TLV341 (single) and TLV342 (dual) in the RUG package also offer a shutdown ($\overline{\text{SHDN}}$) pin that can be used to disable the device. In shutdown mode, the supply current is reduced to 45 pA (typ). Offered in both the SOT-23 and smaller SC-70 packages, the TLV341 is suitable for the most space-constrained applications. The dual TLV342 is offered in the standard SOIC, MSOP, and QFN packages.

An extended industrial temperature range from –40°C to 125°C makes the TLV34x suitable in a wide variety of commercial and industrial applications.

ORDERING INFORMATION†

T_A	MAX V_{IO} (25°C)	PACKAGE‡			ORDERABLE PART NUMBER	TOP-SIDE MARKING§
–40°C to 125°C	Standard grade: 4 mV	Single	SOT-23 – DBV	Reel of 3000	TLV341IDBVR	YC9_
				Reel of 250	TLV341IDBVT	
			SC-70 – DCK	Reel of 3000	TLV341IDCKR	Y4_
				Reel of 250	TLV341IDCKT	
			SOT-563 – DRL	Reel of 4000	TLV341IDRLR	Y4_
		Dual	QFN – RUG	Reel of 3000	TLV342IRUGR	Y6E
				Reel of 3000	TLV342SIRUGR	2YE
			SOIC – D	Tube of 75	TLV342ID	TY342
				Reel of 2500	TLV342IDR	
			MSOP/VSSOP – DGK	Reel of 2500	TLV342IDGKR	PREVIEW
				Reel of 250	TLV342IDGKT	
		Quad	SOIC – D	Tube of 50	TLV344ID	PREVIEW
				Reel of 2500	TLV344IDR	
			TSSOP – PW	Tube of 90	TLV344IPWR	PREVIEW
				Reel of 2000	TLV344IPWR	
	A grade: 1.25 mV	Single	SOT-23 – DBV	Reel of 3000	TLV341AIDBVR	YCG_
				Reel of 250	TLV341AIDBVT	
			SC-70 – DCK	Reel of 3000	TLV341AIDCKR	Y5_
				Reel of 250	TLV341AIDCKT	
		Dual	SOIC – D	Tube of 75	TLV342AID	TY342A
				Reel of 2500	TLV342AIDR	
			MSOP/VSSOP – DGK	Reel of 2500	TLV342AIDGKR	PREVIEW
				Reel of 250	TLV342AIDGKT	
		Quad	SOIC – D	Tube of 50	TLV344AID	PREVIEW
				Reel of 2500	TLV344AIDR	
			TSSOP – PW	Tube of 90	TLV344AIPWR	PREVIEW
				Reel of 2000	TLV344AIPWR	

† For the most current package and ordering information, see the Package Option Addendum at the end of this document, or see the TI web site at www.ti.com.
‡ Package drawings, thermal data, and symbolization are available at www.ti.com/packaging.
§ DBV/DCK/DRL: The actual top-side marking has one additional character that designates the wafer fab/assembly site.

symbol (each amplifier)

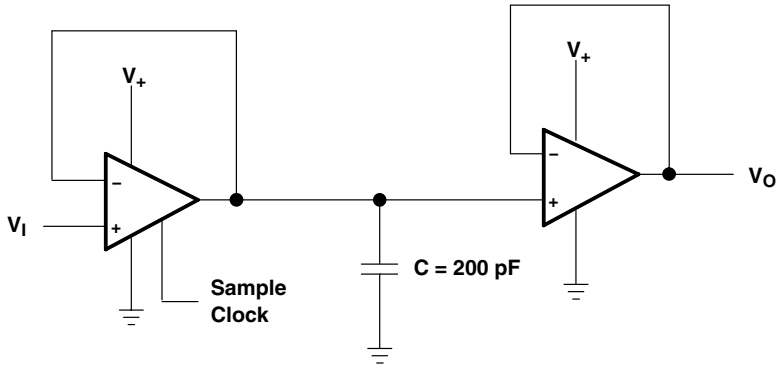

absolute maximum ratings over operating free-air temperature range (unless otherwise noted)†

Supply voltage, V_+ (see Note 1)		5.5 V
Differential input voltage, V_{ID} (see Note 2)		±5.5 V
Input voltage range, V_I (either input)		0 to 5.5 V
Package thermal impedance, θ_{JA} (see Notes 3 and 4):	D package (8 pin)	97°C/W
	D package (14 pin)	86°C/W
	DBV package	165°C/W
	DCK package	259°C/W
	DGK package	172°C/W
	DRL package	142°C/W
	PW package	113°C/W
	RUG package	243°C/W
Operating virtual junction temperature		150°C
Storage temperature range, T_{stg}		–65°C to 150°C

† Stresses beyond those listed under "absolute maximum ratings" may cause permanent damage to the device. These are stress ratings only, and functional operation of the device at these or any other conditions beyond those indicated under "recommended operating conditions" is not implied. Exposure to absolute-maximum-rated conditions for extended periods may affect device reliability.

NOTES:
1. All voltage values (except differential voltages and V_+ specified for the measurement of I_{OS}) are with respect to the network GND.
2. Differential voltages are at IN+ with respect to IN–.
3. Maximum power dissipation is a function of $T_J(max)$, θ_{JA}, and T_A. The maximum allowable power dissipation at any allowable ambient temperature is $P_D = (T_J(max) - T_A)/\theta_{JA}$. Selecting the maximum of 150°C can affect reliability.
4. The package thermal impedance is calculated in accordance with JESD 51-7.

recommended operating conditions

		MIN	MAX	UNIT
V_+	Supply voltage (single-supply operation)	1.5	5.5	V
T_A	Operating free-air temperature	–40	125	°C

ESD protection

TEST CONDITIONS	TYP	UNIT
Human-Body Model	2000	V
Machine Model	200	V

electrical characteristics, V_+ = 1.8 V, GND = 0, $V_{IC} = V_O = V_+/2$, $R_L > 1$ MΩ (unless otherwise noted)

PARAMETER		TEST CONDITIONS		T_A	MIN	TYP†	MAX	UNIT
V_{IO}	Input offset voltage	Standard grade		25°C		0.3	4	mV
				Full range			4.5	
		A grade		25°C		0.3	1.25	
				0°C to 125°C		0.3	1.5	
				–40°C to 125°C		0.3	1.7	
$\alpha_{V_{IO}}$	Average temperature coefficient of input offset voltage			Full range		1.9		μV/°C
I_{IB}	Input bias current			25°C		1	100	pA
				–40°C to 85°C			375	
				–40°C to 125°C			3000	
I_{IO}	Input offset current			25°C		6.6		fA
CMRR	Common-mode rejection ratio	$0 \le V_{ICR} \le 1.2$ V		25°C	60	85		dB
				Full range	50			
k_{SVR}	Supply-voltage rejection ratio	1.8 V ≤ V_+ ≤ 5 V		25°C	75	95		dB
				Full range	65			
V_{ICR}	Common-mode input voltage range	CMRR ≥ 60 dB		25°C	0		1.2	V
A_V	Large-signal voltage gain (see Note 5)	R_L = 10 kΩ to 1.35 V		25°C	70	110		dB
				Full range	60			
		R_L = 2 kΩ to 1.35 V		25°C	65	100		
				Full range	55			
V_O	Output swing (delta from supply rails)	R_L = 2 kΩ to 0.9 V	Low level	25°C		22	50	mV
				Full range			75	
			High level	25°C		25	50	
				Full range			75	
		R_L = 10 kΩ to 0.9 V	Low level	25°C		14	20	
				Full range			25	
			High level	25°C		7	20	
				Full range			25	
I_{CC}	Supply current (per channel)			25°C		70	150	μA
				Full range			200	
I_{OS}	Output short-circuit current	Sourcing		25°C	6	12		mA
		Sinking			10	20		
SR	Slew rate	R_L = 10 kΩ, Note 6		25°C		0.9		V/μs
GBW	Unity-gain bandwidth	R_L = 100 kΩ, C_L = 200 pF		25°C		2.2		MHz
Φ_m	Phase margin	R_L = 100 kΩ, C_L = 20 pF		25°C		55		°
G_m	Gain margin	R_L = 100 kΩ, C_L = 20 pF		25°C		15		dB
V_n	Equivalent input noise voltage	f = 1 kHz		25°C		33		nV/√Hz
I_n	Equivalent input noise current	f = 1 kHz		25°C		0.001		pA/√Hz
THD	Total harmonic distortion	f = 1 kHz, A_V = 1, R_L = 600 Ω, V_I = 1 V_{PP}		25°C		0.015		%

† Typical values represent the most likely parametric norm.

NOTES: 5. GND + 0.2 V ≤ V_O ≤ V_{CC+} – 0.2 V
6. Connected as voltage follower with 1.1-V_{PP} step input. Number specified is the slower of the positive and negative slew rates.

shutdown characteristics, V_+ = 1.8 V, GND = 0, $V_{IC} = V_O = V_+/2$, R_L > 1 MΩ (unless otherwise noted)

PARAMETER		TEST CONDITIONS	T_A	MIN	TYP	MAX	UNIT
$I_{CC(SHDN)}$	Supply current in shutdown mode (per channel)	V_{SD} = 0 V	25°C		0.01	1	µA
			Full range			1.5	µA
$t_{(on)}$	Amplifier turn-on time		25°C		5		µs
V_{SD}	Shutdown pin voltage range	ON mode	25°C	1.5		1.8	V
		Shutdown mode		0		0.5	

electrical characteristics, V_+ = 5 V, GND = 0, $V_{IC} = V_O = V_+/2$, $R_L > 1$ MΩ (unless otherwise noted)

PARAMETER		TEST CONDITIONS		T_A	MIN	TYP†	MAX	UNIT
V_{IO}	Input offset voltage	Standard grade		25°C		0.3	4	mV
				Full range			4.5	
		A grade		25°C		0.3	1.25	
				0°C to 125°C		0.3	1.5	
				–40°C to 125°C		0.3	1.7	
$\alpha_{V_{IO}}$	Average temperature coefficient of input offset voltage			Full range		1.9		μV/°C
I_{IB}	Input bias current			25°C		1	200	pA
				–40°C to 85°C			375	
				–40°C to 125°C			3000	
I_{IO}	Input offset current			25°C		6.6		fA
CMRR	Common-mode rejection ratio	$0 \le V_{ICR} \le 4.4$ V		25°C	75	90		dB
				Full range	70			
k_{SVR}	Supply-voltage rejection ratio	1.8 V ≤ V_+ ≤ 5 V		25°C	75	95		dB
				Full range	65			
V_{ICR}	Common-mode input voltage range	CMRR ≥ 70 dB		25°C	0	–0.2 to 4.5	4.4	V
A_V	Large-signal voltage gain (see Note 5)	R_L = 10 kΩ to 2.5 V		25°C	80	110		dB
				Full range	70			
		R_L = 2 kΩ to 2.5 V		25°C	75	105		
				Full range	60			
V_O	Output swing (delta from supply voltage)	R_L = 2 kΩ to 2.5 V	Low level	25°C		40	60	mV
				Full range			85	
			High level	25°C		25	60	
				Full range			85	
		R_L = 10 kΩ to 2.5 V	Low level	25°C		18	30	
				Full range			40	
			High level	25°C		7	15	
				Full range			20	
I_{CC}	Supply current (per channel)			25°C		75	150	μA
				Full range			200	
I_{OS}	Output short-circuit current	Sourcing		25°C	60	113		mA
		Sinking			80	115		
SR	Slew rate	R_L = 10 kΩ, Note 6		25°C		1		V/μs
GBW	Unity-gain bandwidth	R_L = 10 kΩ, C_L = 200 pF		25°C		2.3		MHz
Φ_m	Phase margin	R_L = 100 kΩ, C_L = 20 pF		25°C		55		°
G_m	Gain margin	R_L = 100 kΩ, C_L = 20 pF		25°C		15		dB
V_n	Equivalent input noise voltage	f = 1 kHz		25°C		33		nV/√Hz
I_n	Equivalent input noise current	f = 1 kHz		25°C		0.001		pA/√Hz
THD	Total harmonic distortion	f = 1 kHz, A_V = 1, R_L = 600 Ω, V_I = 1 V_{PP}		25°C		0.012		%

† Typical values represent the most likely parametric norm.

NOTES: 5. GND + 0.2 V ≤ $V_O \le V_{CC+}$ – 0.2 V
6. Connected as voltage follower with 2-V_{PP} step input. Number specified is the slower of the positive and negative slew rates.

shutdown characteristics, V_+ = 5 V, GND = 0, V_{IC} = V_O = V_+/2, R_L > 1 MΩ (unless otherwise noted)

PARAMETER		TEST CONDITIONS	T_A	MIN	TYP	MAX	UNIT
$I_{CC(SHDN)}$	Supply current in shutdown mode (per channel)	V_{SD} = 0 V	25°C		0.01	1	μA
			Full range			1.5	
$t_{(on)}$	Amplifier turn-on time		25°C		5		μs
V_{SD}	Shutdown pin voltage range	ON mode	25°C	4.5		5	V
		Shutdown mode		0		0.8	

TYPICAL CHARACTERISTICS

SUPPLY CURRENT vs SUPPLY VOLTAGE

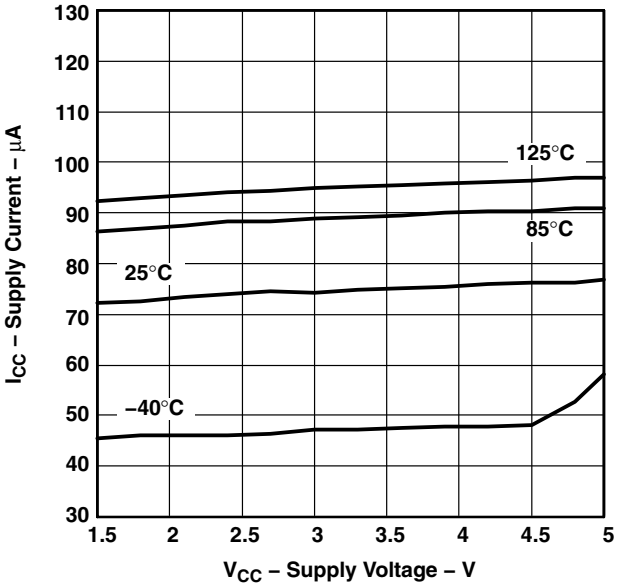

Figure 1

INPUT BIAS CURRENT vs TEMPERATURE

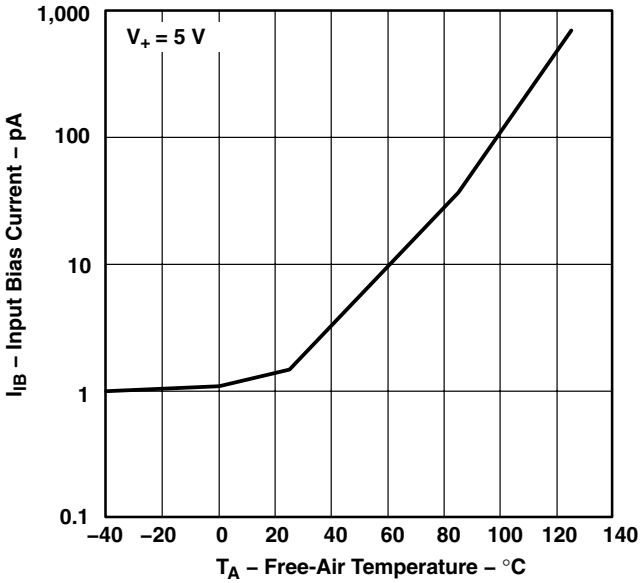

Figure 2

OUTPUT VOLTAGE SWING vs SUPPLY VOLTAGE

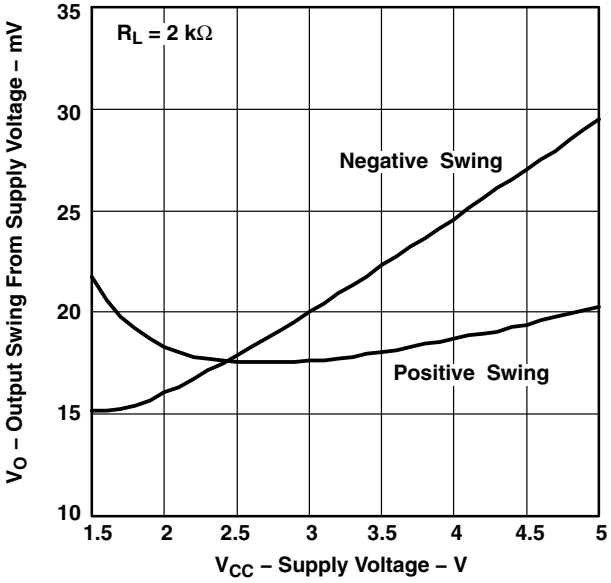

Figure 3

OUTPUT VOLTAGE SWING vs SUPPLY VOLTAGE

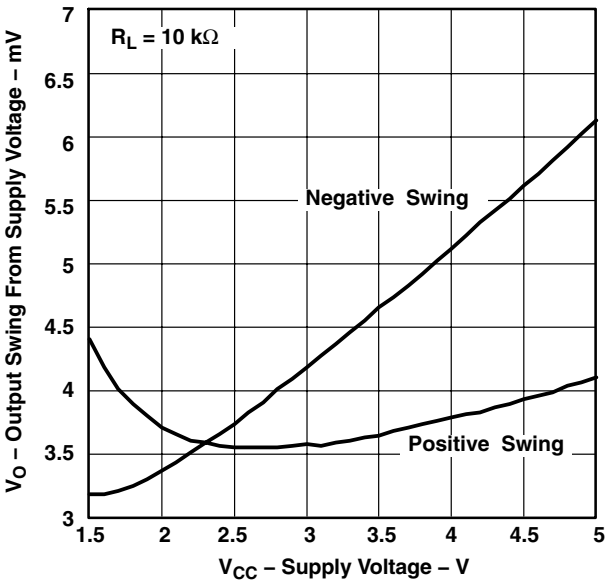

Figure 4

TYPICAL CHARACTERISTICS

SOURCE CURRENT vs OUTPUT VOLTAGE

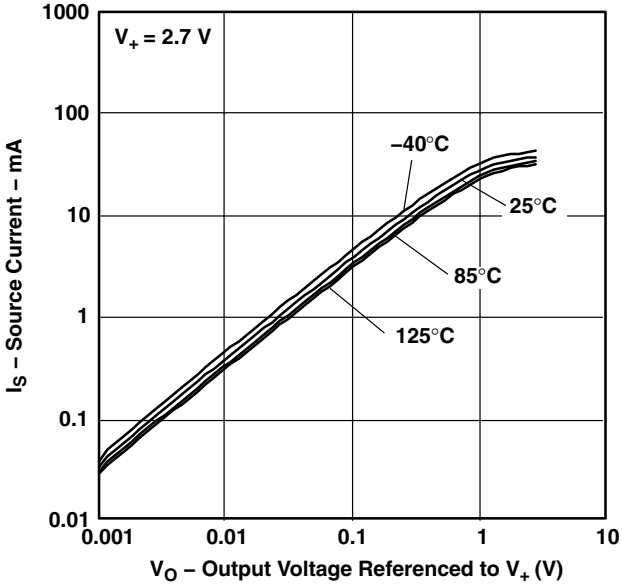

Figure 5

SOURCE CURRENT vs OUTPUT VOLTAGE

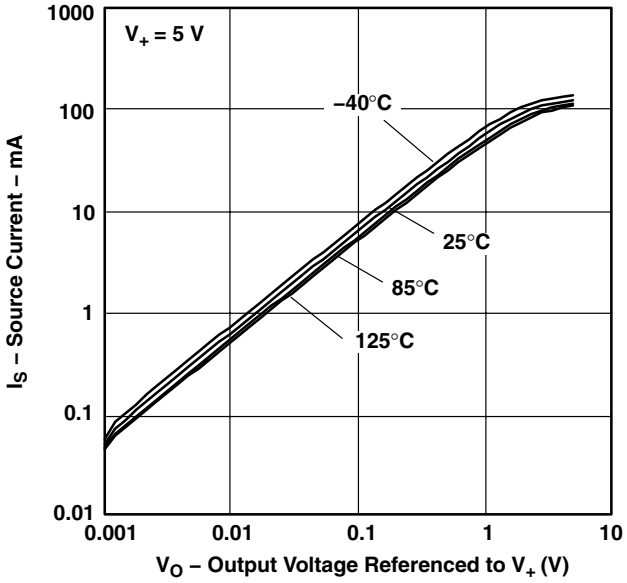

Figure 6

SINK CURRENT vs OUTPUT VOLTAGE

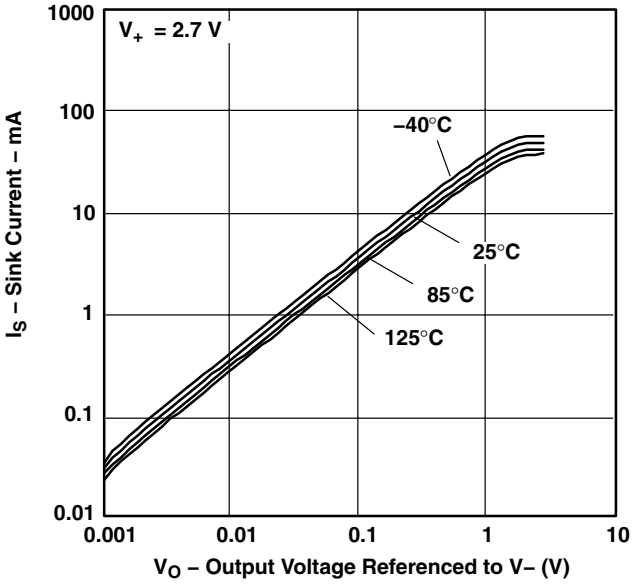

Figure 7

SINK CURRENT vs OUTPUT VOLTAGE

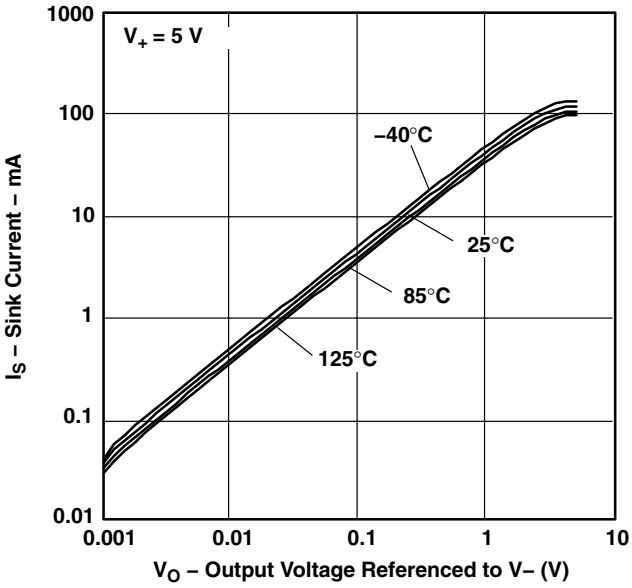

Figure 8

TYPICAL CHARACTERISTICS

OFFSET VOLTAGE vs COMMON-MODE VOLTAGE

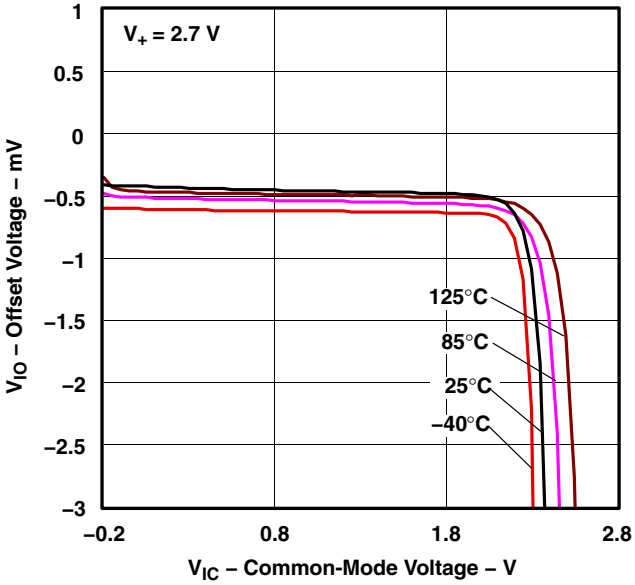

Figure 9

OFFSET VOLTAGE vs COMMON-MODE VOLTAGE

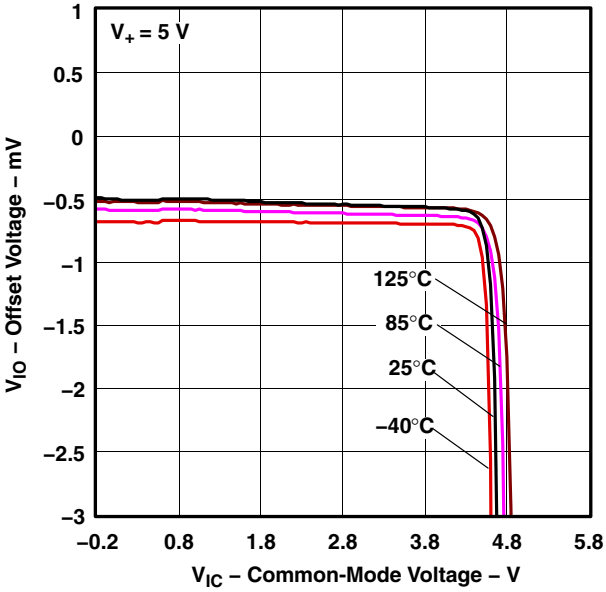

Figure 10

INPUT VOLTAGE vs OUTPUT VOLTAGE

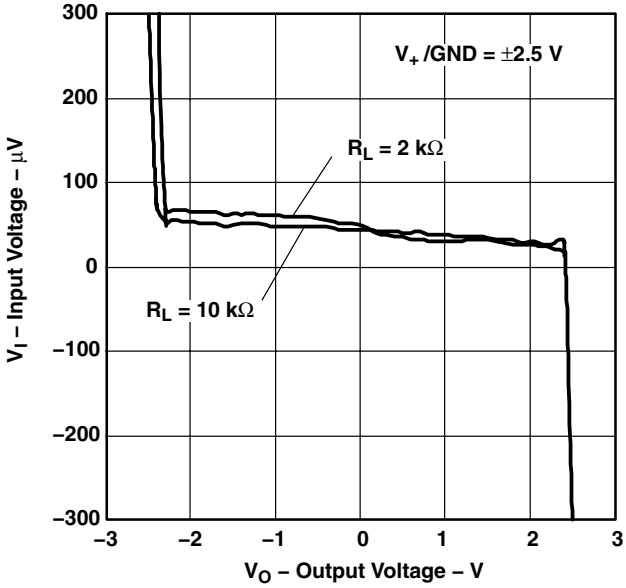

Figure 11

INPUT VOLTAGE vs OUTPUT VOLTAGE

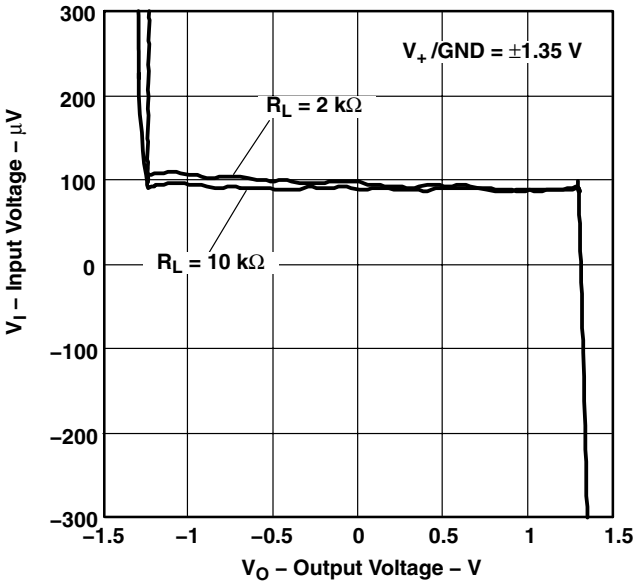

Figure 12

TYPICAL CHARACTERISTICS

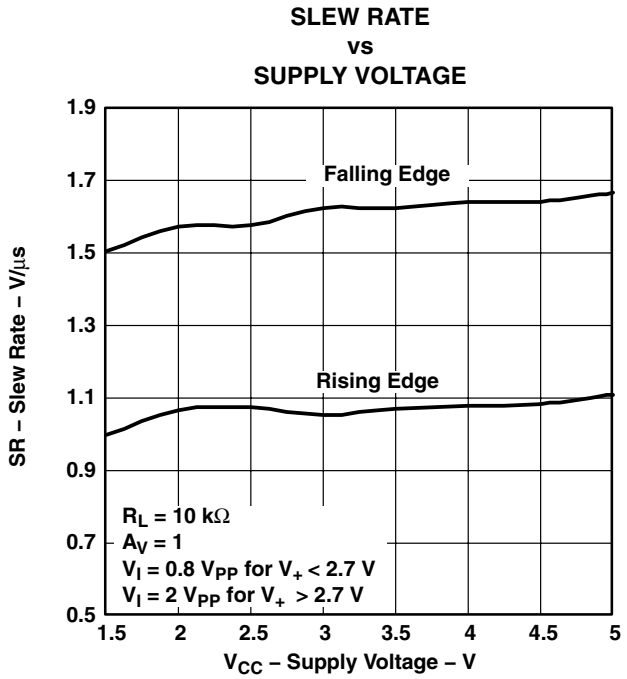

Figure 13

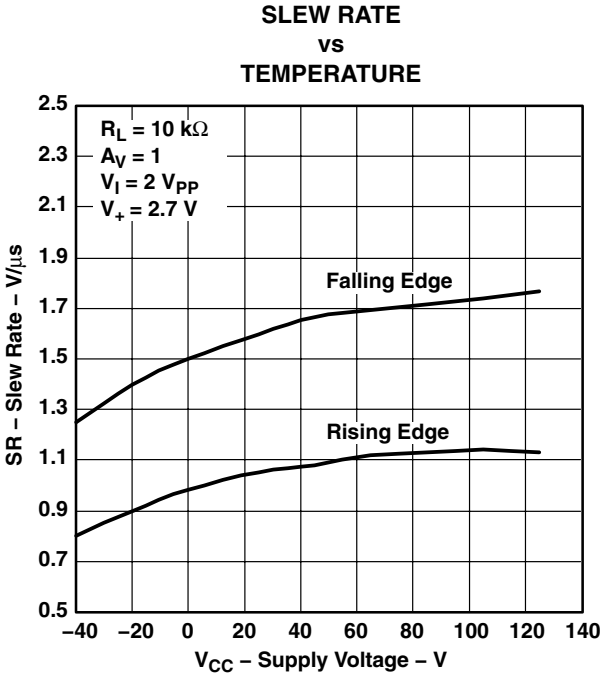

Figure 14

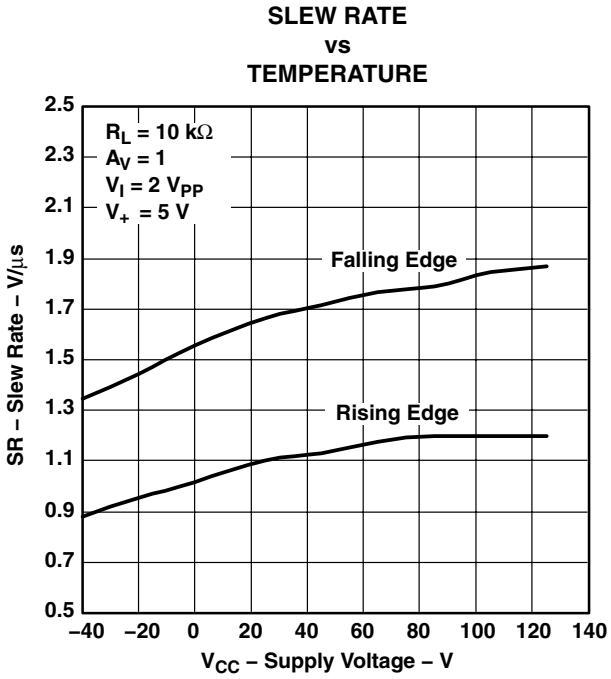

Figure 15

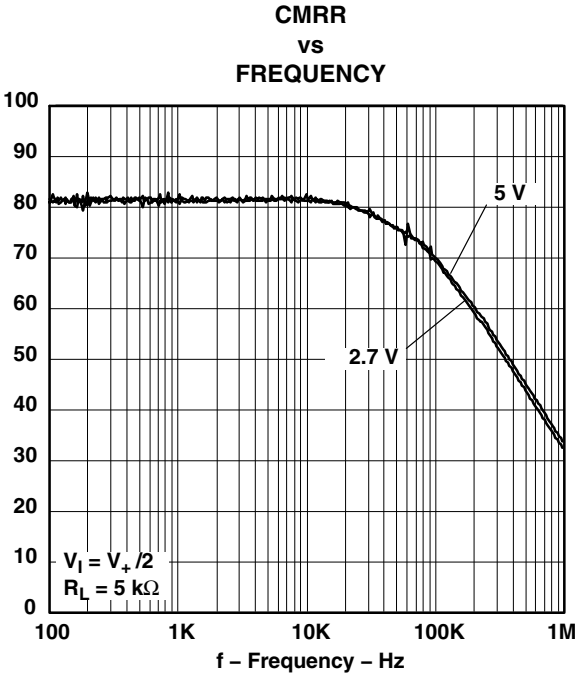

Figure 16

TYPICAL CHARACTERISTICS

PSRR vs FREQUENCY

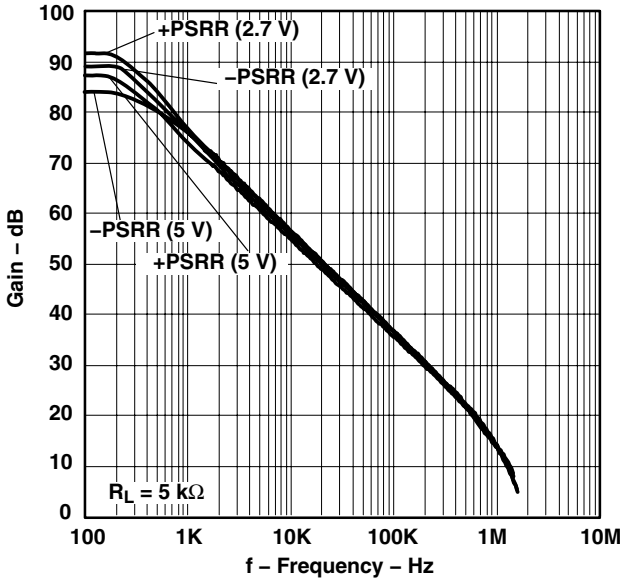

Figure 17

INPUT VOLTAGE NOISE vs FREQUENCY

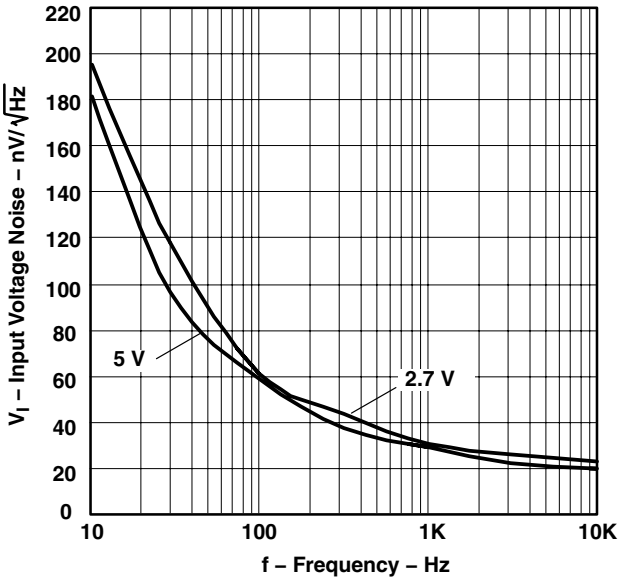

Figure 18

TOTAL HARMONIC DISTORTION + NOISE vs FREQUENCY

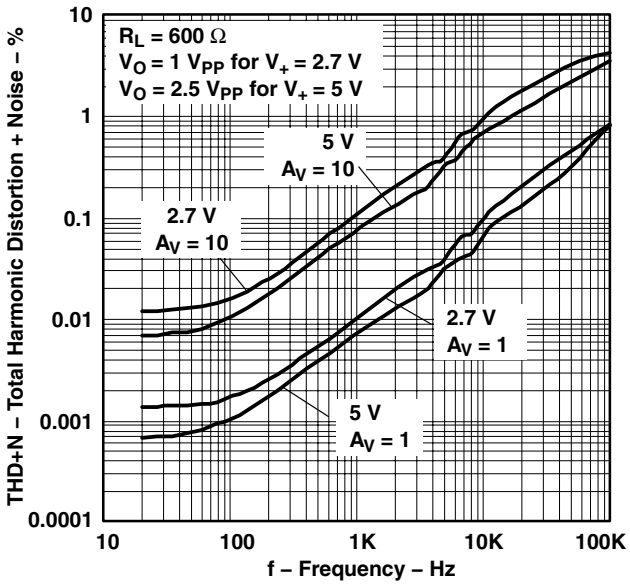

Figure 19

TOTAL HARMONIC DISTORTION + NOISE vs OUTPUT VOLTAGE

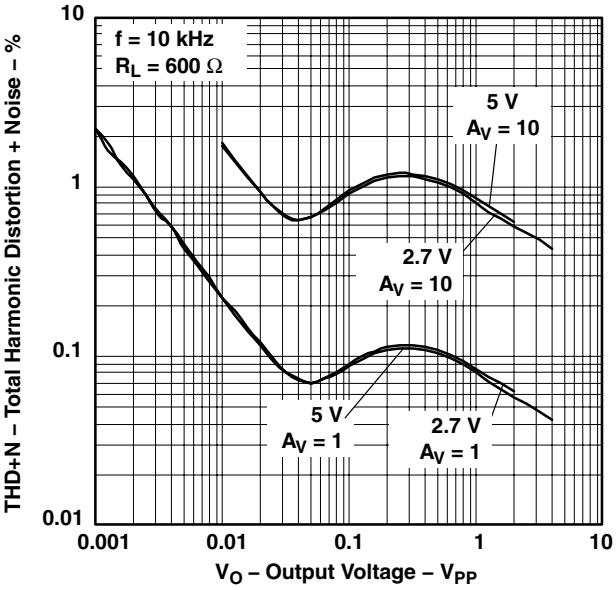

Figure 20

TYPICAL CHARACTERISTICS

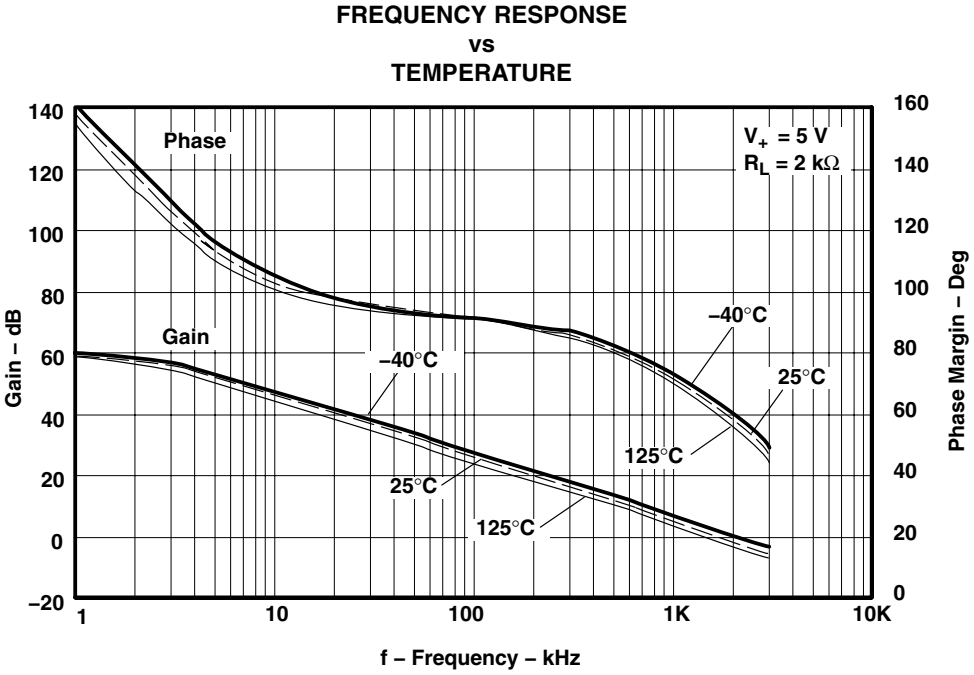

Figure 21

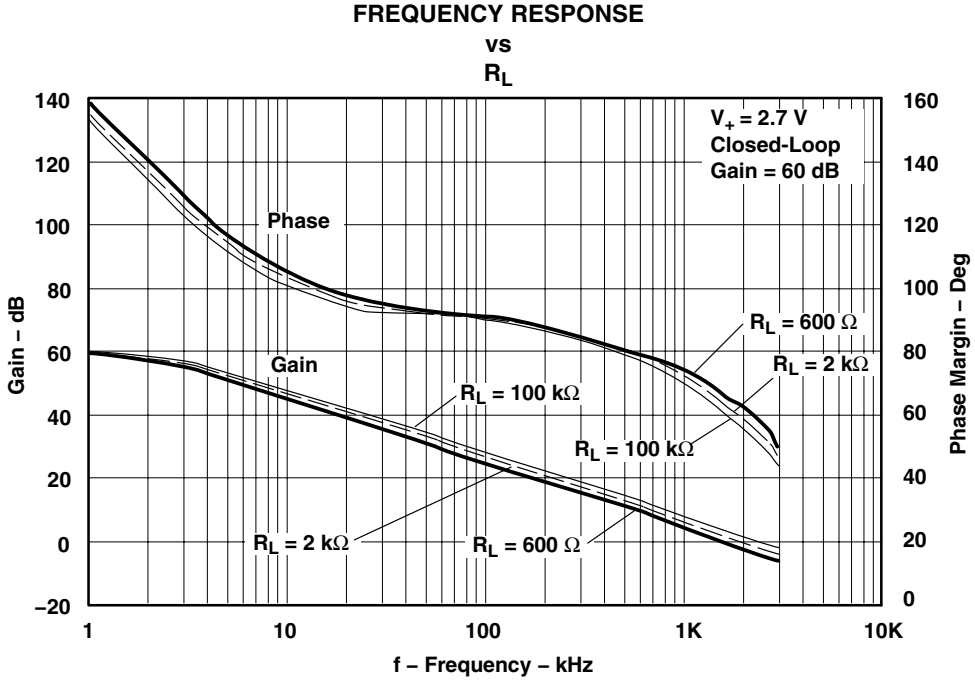

Figure 22

TYPICAL CHARACTERISTICS

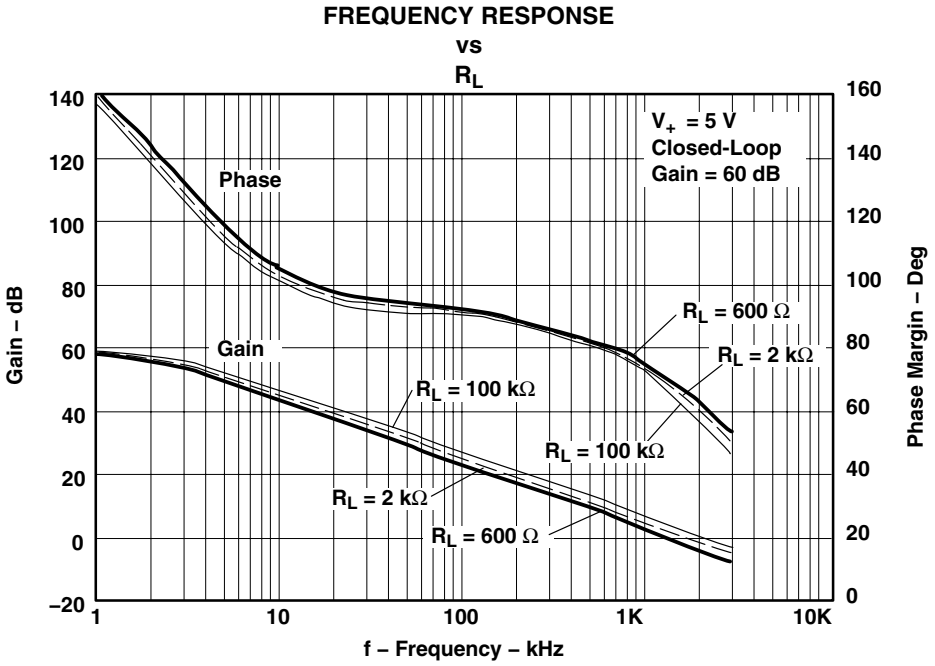

Figure 23

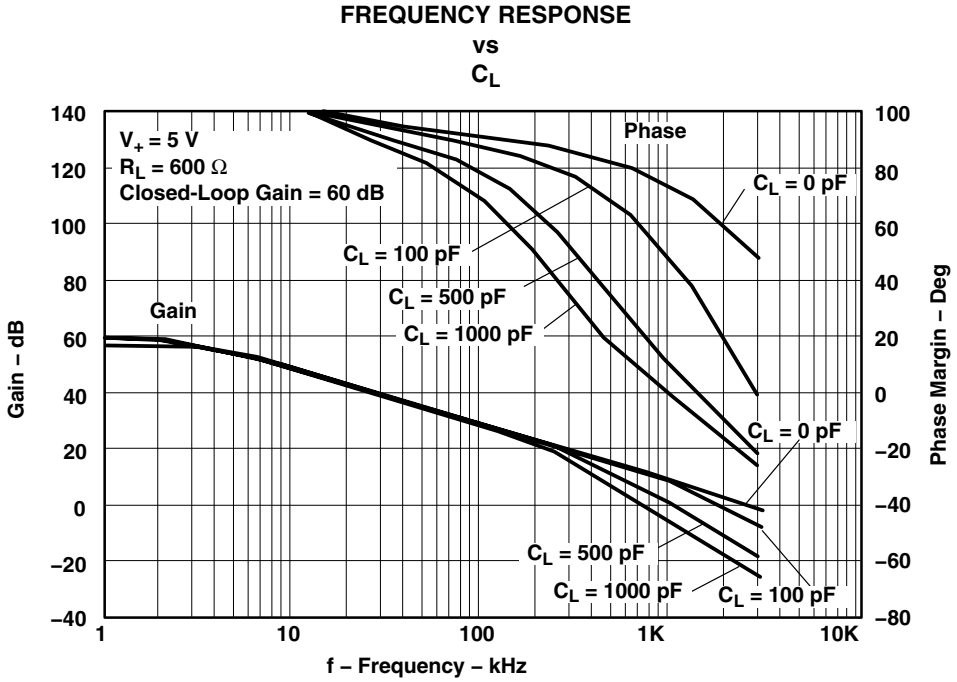

Figure 24

TYPICAL CHARACTERISTICS

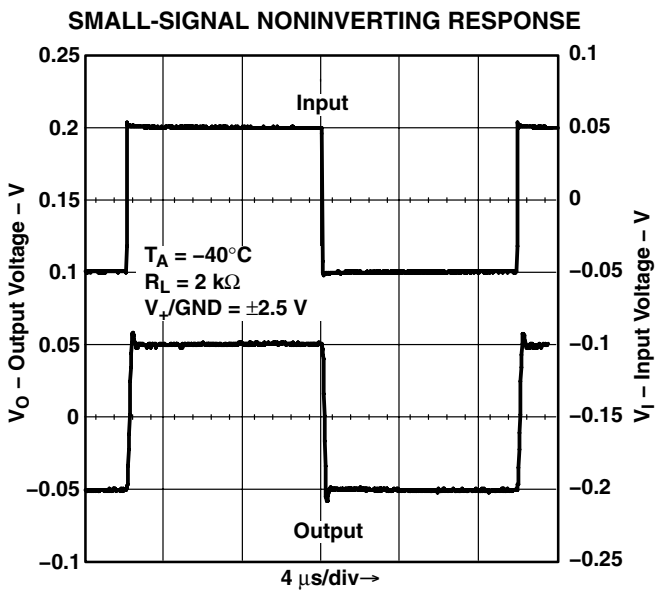

Figure 25

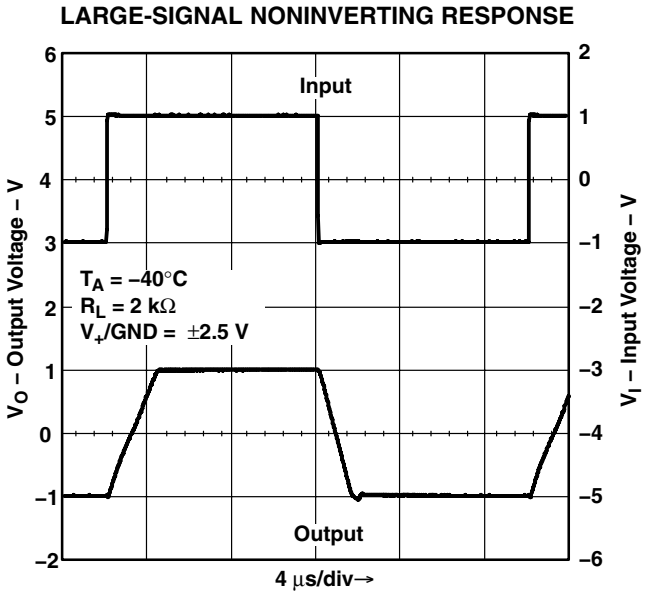

Figure 26

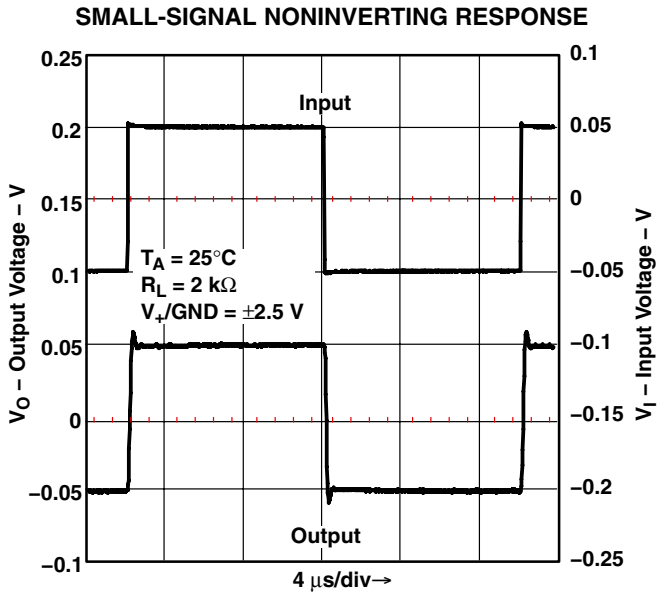

Figure 27

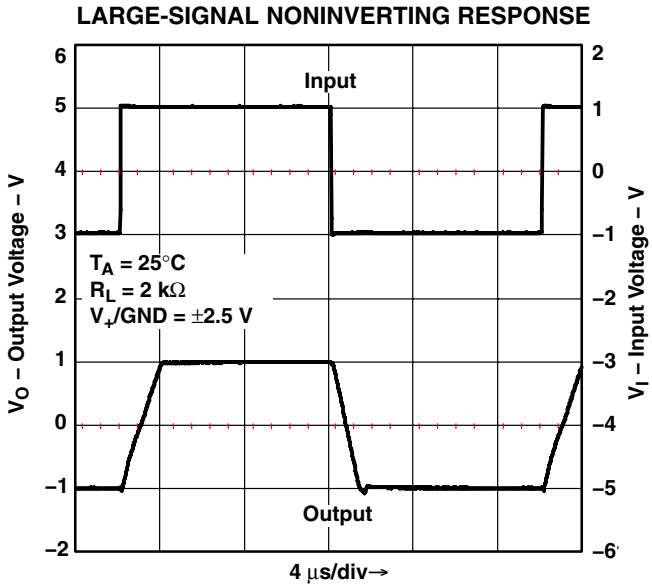

Figure 28

TYPICAL CHARACTERISTICS

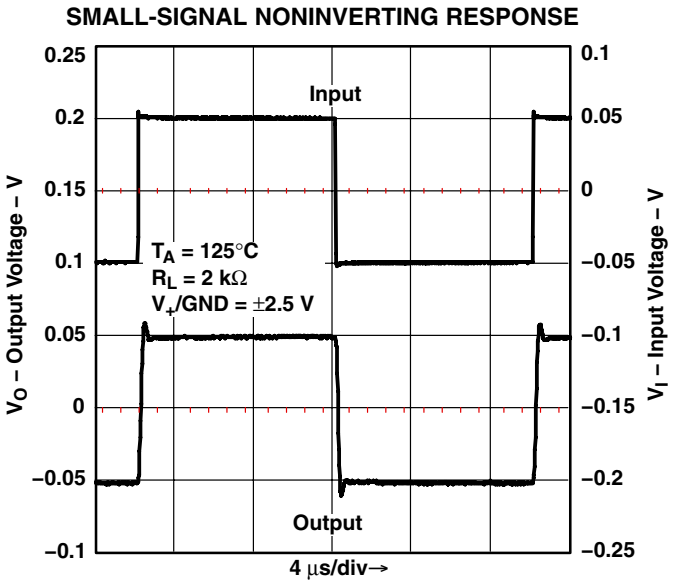

Figure 29

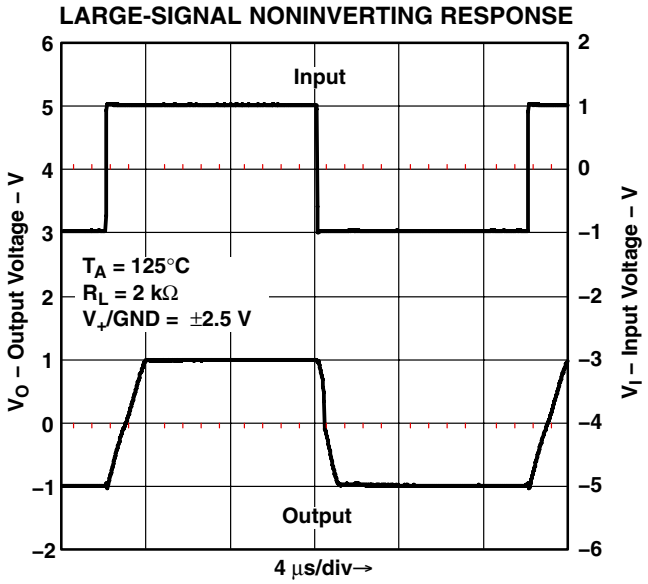

Figure 30

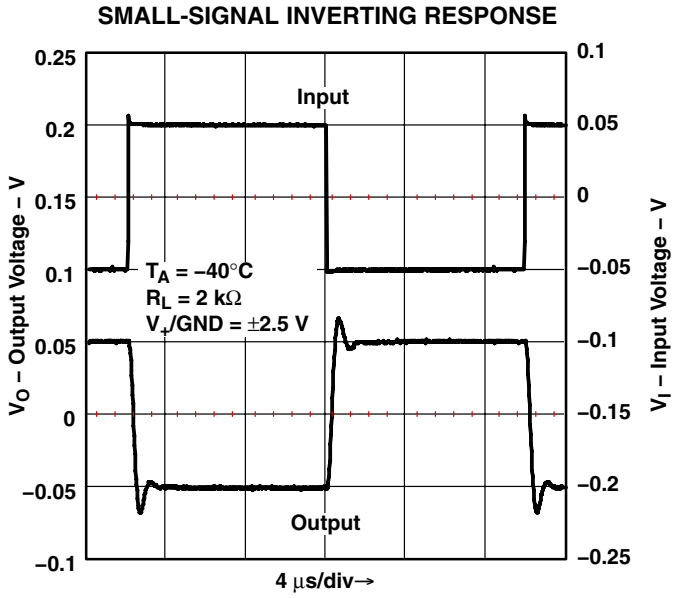

Figure 31

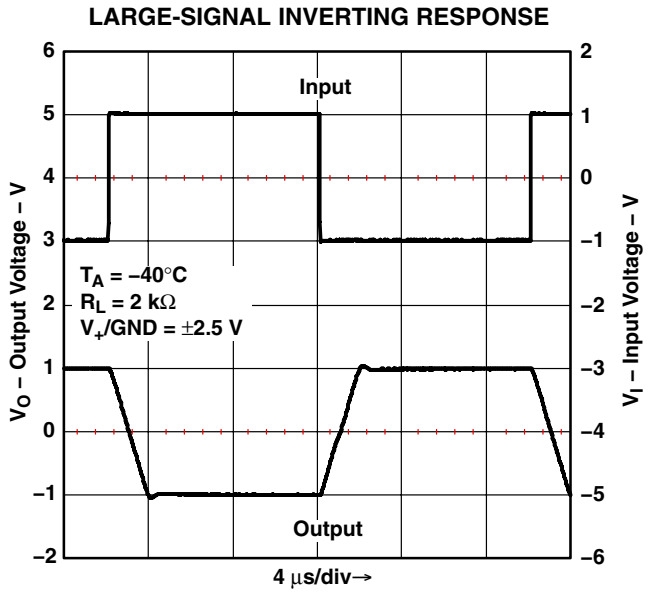

Figure 32

TYPICAL CHARACTERISTICS

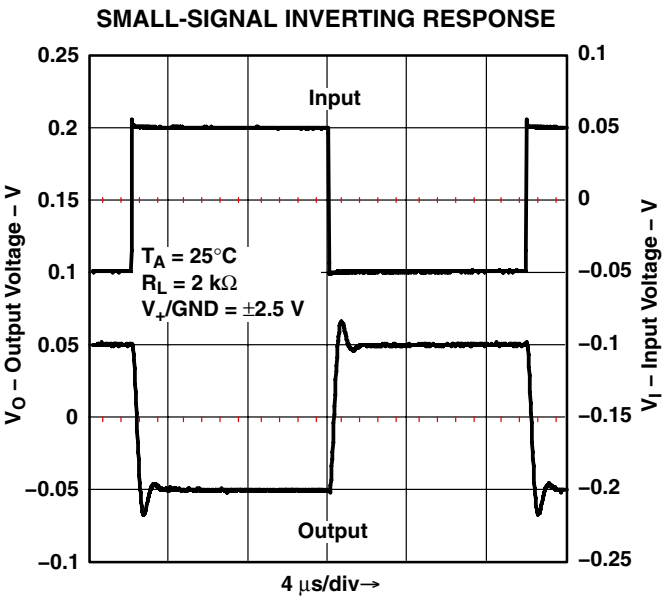

Figure 33

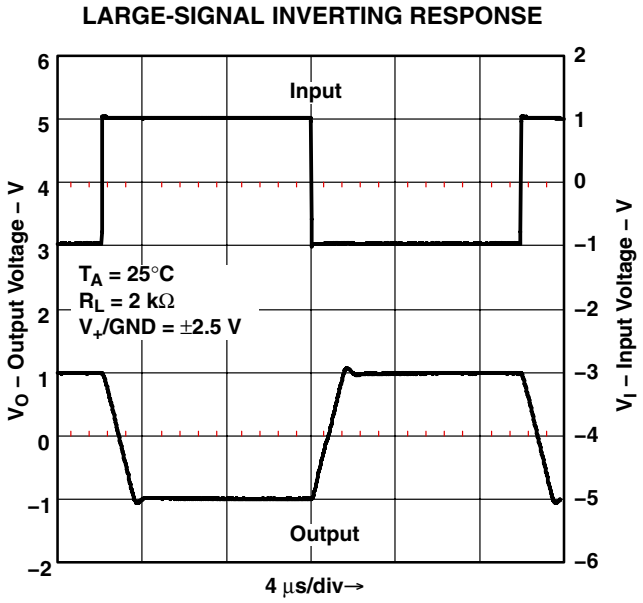

Figure 34

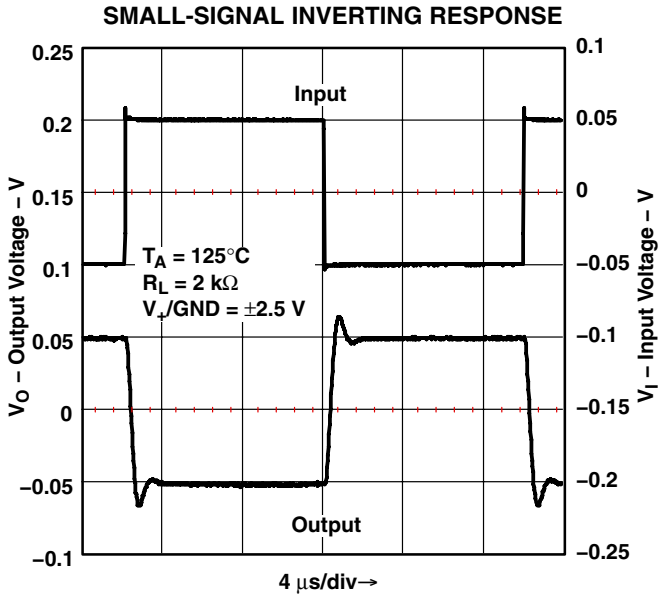

Figure 35

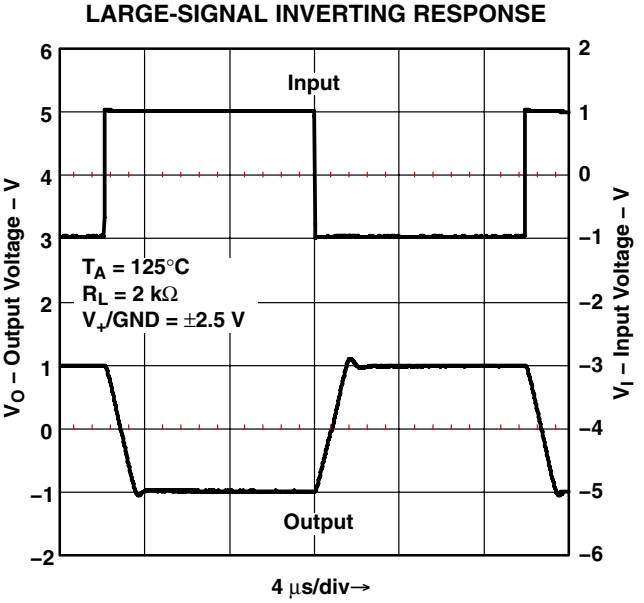

Figure 36

PACKAGING INFORMATION

Orderable Device	Status (1)	Package Type	Package Drawing	Pins	Package Qty	Eco Plan (2)	Lead/Ball Finish (6)	MSL Peak Temp (3)	Op Temp (°C)	Device Marking (4/5)	Samples
TLV341AIDBVR	ACTIVE	SOT-23	DBV	6	3000	Green (RoHS & no Sb/Br)	CU NIPDAU	Level-1-260C-UNLIM	-40 to 125	YCGE	Samples
TLV341AIDBVT	ACTIVE	SOT-23	DBV	6	250	Green (RoHS & no Sb/Br)	CU NIPDAU	Level-1-260C-UNLIM	-40 to 125	YCGE	Samples
TLV341AIDBVTE4	ACTIVE	SOT-23	DBV	6	250	Green (RoHS & no Sb/Br)	CU NIPDAU	Level-1-260C-UNLIM	-40 to 125	YCGE	Samples
TLV341AIDCKR	ACTIVE	SC70	DCK	6	3000	Green (RoHS & no Sb/Br)	CU NIPDAU	Level-1-260C-UNLIM	-40 to 125	Y5E	Samples
TLV341AIDCKT	ACTIVE	SC70	DCK	6	250	Green (RoHS & no Sb/Br)	CU NIPDAU	Level-1-260C-UNLIM	-40 to 125	Y5E	Samples
TLV341AIDCKTG4	ACTIVE	SC70	DCK	6	250	Green (RoHS & no Sb/Br)	CU NIPDAU	Level-1-260C-UNLIM	-40 to 125	Y5E	Samples
TLV341IDBVR	ACTIVE	SOT-23	DBV	6	3000	Green (RoHS & no Sb/Br)	CU NIPDAU	Level-1-260C-UNLIM	-40 to 125	YC9E	Samples
TLV341IDBVRG4	ACTIVE	SOT-23	DBV	6	3000	Green (RoHS & no Sb/Br)	CU NIPDAU	Level-1-260C-UNLIM	-40 to 125	YC9E	Samples
TLV341IDCKR	ACTIVE	SC70	DCK	6	3000	Green (RoHS & no Sb/Br)	CU NIPDAU	Level-1-260C-UNLIM	-40 to 125	Y4E	Samples
TLV341IDCKT	ACTIVE	SC70	DCK	6	250	Green (RoHS & no Sb/Br)	CU NIPDAU	Level-1-260C-UNLIM	-40 to 125	Y4E	Samples
TLV341IDCKTG4	ACTIVE	SC70	DCK	6	250	Green (RoHS & no Sb/Br)	CU NIPDAU	Level-1-260C-UNLIM	-40 to 125	Y4E	Samples
TLV341IDRLR	ACTIVE	SOT	DRL	6	4000	Green (RoHS & no Sb/Br)	CU NIPDAU	Level-1-260C-UNLIM	-40 to 125	(Y4A ~ Y4W)	Samples
TLV342AID	ACTIVE	SOIC	D	8	75	Green (RoHS & no Sb/Br)	CU NIPDAU	Level-1-260C-UNLIM	-40 to 125	TY342A	Samples
TLV342AIDG4	ACTIVE	SOIC	D	8	75	Green (RoHS & no Sb/Br)	CU NIPDAU	Level-1-260C-UNLIM	-40 to 125	TY342A	Samples
TLV342AIDR	ACTIVE	SOIC	D	8	2500	Green (RoHS & no Sb/Br)	CU NIPDAU	Level-1-260C-UNLIM	-40 to 125	TY342A	Samples
TLV342AIDRG4	ACTIVE	SOIC	D	8	2500	Green (RoHS & no Sb/Br)	CU NIPDAU	Level-1-260C-UNLIM	-40 to 125	TY342A	Samples
TLV342ID	ACTIVE	SOIC	D	8	75	Green (RoHS & no Sb/Br)	CU NIPDAU	Level-1-260C-UNLIM	-40 to 125	TY342	Samples

Orderable Device	Status (1)	Package Type	Package Drawing	Pins	Package Qty	Eco Plan (2)	Lead/Ball Finish (6)	MSL Peak Temp (3)	Op Temp (°C)	Device Marking (4/5)	Samples
TLV342IDGKR	ACTIVE	VSSOP	DGK	8	2500	Green (RoHS & no Sb/Br)	CU NIPDAU	Level-1-260C-UNLIM	-40 to 125	Y6A	Samples
TLV342IDR	ACTIVE	SOIC	D	8	2500	Green (RoHS & no Sb/Br)	CU NIPDAU	Level-1-260C-UNLIM	-40 to 125	TY342	Samples
TLV342IRUGR	ACTIVE	X2QFN	RUG	10	3000	Green (RoHS & no Sb/Br)	CU NIPDAU	Level-1-260C-UNLIM	-40 to 125	Y6E	Samples
TLV342SIRUGR	ACTIVE	X2QFN	RUG	10	3000	Green (RoHS & no Sb/Br)	CU NIPDAU	Level-1-260C-UNLIM	-40 to 125	2YE	Samples

(1) The marketing status values are defined as follows:
ACTIVE: Product device recommended for new designs.
LIFEBUY: TI has announced that the device will be discontinued, and a lifetime-buy period is in effect.
NRND: Not recommended for new designs. Device is in production to support existing customers, but TI does not recommend using this part in a new design.
PREVIEW: Device has been announced but is not in production. Samples may or may not be available.
OBSOLETE: TI has discontinued the production of the device.

(2) Eco Plan - The planned eco-friendly classification: Pb-Free (RoHS), Pb-Free (RoHS Exempt), or Green (RoHS & no Sb/Br) - please check http://www.ti.com/productcontent for the latest availability information and additional product content details.
TBD: The Pb-Free/Green conversion plan has not been defined.
Pb-Free (RoHS): TI's terms "Lead-Free" or "Pb-Free" mean semiconductor products that are compatible with the current RoHS requirements for all 6 substances, including the requirement that lead not exceed 0.1% by weight in homogeneous materials. Where designed to be soldered at high temperatures, TI Pb-Free products are suitable for use in specified lead-free processes.
Pb-Free (RoHS Exempt): This component has a RoHS exemption for either 1) lead-based flip-chip solder bumps used between the die and package, or 2) lead-based die adhesive used between the die and leadframe. The component is otherwise considered Pb-Free (RoHS compatible) as defined above.
Green (RoHS & no Sb/Br): TI defines "Green" to mean Pb-Free (RoHS compatible), and free of Bromine (Br) and Antimony (Sb) based flame retardants (Br or Sb do not exceed 0.1% by weight in homogeneous material)

(3) MSL, Peak Temp. - The Moisture Sensitivity Level rating according to the JEDEC industry standard classifications, and peak solder temperature.

(4) There may be additional marking, which relates to the logo, the lot trace code information, or the environmental category on the device.

(5) Multiple Device Markings will be inside parentheses. Only one Device Marking contained in parentheses and separated by a "~" will appear on a device. If a line is indented then it is a continuation of the previous line and the two combined represent the entire Device Marking for that device.

(6) Lead/Ball Finish - Orderable Devices may have multiple material finish options. Finish options are separated by a vertical ruled line. Lead/Ball Finish values may wrap to two lines if the finish value exceeds the maximum column width.

Important Information and Disclaimer: The information provided on this page represents TI's knowledge and belief as of the date that it is provided. TI bases its knowledge and belief on information provided by third parties, and makes no representation or warranty as to the accuracy of such information. Efforts are underway to better integrate information from third parties. TI has taken and

continues to take reasonable steps to provide representative and accurate information but may not have conducted destructive testing or chemical analysis on incoming materials and chemicals.
TI and TI suppliers consider certain information to be proprietary, and thus CAS numbers and other limited information may not be available for release.

In no event shall TI's liability arising out of such information exceed the total purchase price of the TI part(s) at issue in this document sold by TI to Customer on an annual basis.

TAPE AND REEL INFORMATION

REEL DIMENSIONS

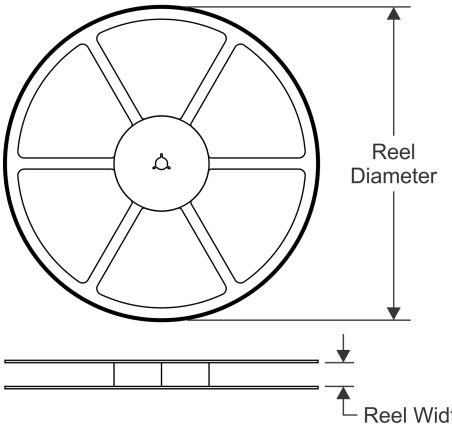

TAPE DIMENSIONS

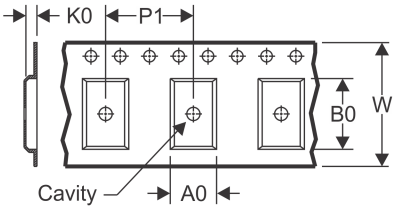

A0	Dimension designed to accommodate the component width
B0	Dimension designed to accommodate the component length
K0	Dimension designed to accommodate the component thickness
W	Overall width of the carrier tape
P1	Pitch between successive cavity centers

QUADRANT ASSIGNMENTS FOR PIN 1 ORIENTATION IN TAPE

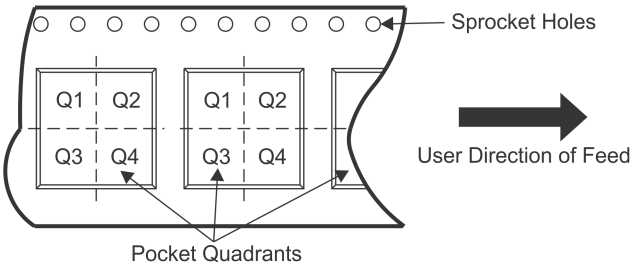

*All dimensions are nominal

Device	Package Type	Package Drawing	Pins	SPQ	Reel Diameter (mm)	Reel Width W1 (mm)	A0 (mm)	B0 (mm)	K0 (mm)	P1 (mm)	W (mm)	Pin1 Quadrant
TLV341AIDBVR	SOT-23	DBV	6	3000	179.0	8.4	3.2	3.2	1.4	4.0	8.0	Q3
TLV341AIDBVT	SOT-23	DBV	6	250	179.0	8.4	3.2	3.2	1.4	4.0	8.0	Q3
TLV341AIDCKR	SC70	DCK	6	3000	179.0	8.4	2.2	2.5	1.2	4.0	8.0	Q3
TLV341AIDCKT	SC70	DCK	6	250	179.0	8.4	2.2	2.5	1.2	4.0	8.0	Q3
TLV341IDBVR	SOT-23	DBV	6	3000	179.0	8.4	3.2	3.2	1.4	4.0	8.0	Q3
TLV341IDCKR	SC70	DCK	6	3000	179.0	8.4	2.2	2.5	1.2	4.0	8.0	Q3
TLV341IDCKT	SC70	DCK	6	250	179.0	8.4	2.2	2.5	1.2	4.0	8.0	Q3
TLV341IDRLR	SOT	DRL	6	4000	180.0	9.5	1.78	1.78	0.69	4.0	8.0	Q3
TLV341IDRLR	SOT	DRL	6	4000	180.0	8.4	1.98	1.78	0.69	4.0	8.0	Q3
TLV342AIDR	SOIC	D	8	2500	330.0	12.4	6.4	5.2	2.1	8.0	12.0	Q1
TLV342IDGKR	VSSOP	DGK	8	2500	330.0	12.4	5.3	3.4	1.4	8.0	12.0	Q1
TLV342IDR	SOIC	D	8	2500	330.0	12.4	6.4	5.2	2.1	8.0	12.0	Q1
TLV342IRUGR	X2QFN	RUG	10	3000	179.0	8.4	1.75	2.25	0.65	4.0	8.0	Q1
TLV342SIRUGR	X2QFN	RUG	10	3000	179.0	8.4	1.75	2.25	0.65	4.0	8.0	Q1

TAPE AND REEL BOX DIMENSIONS

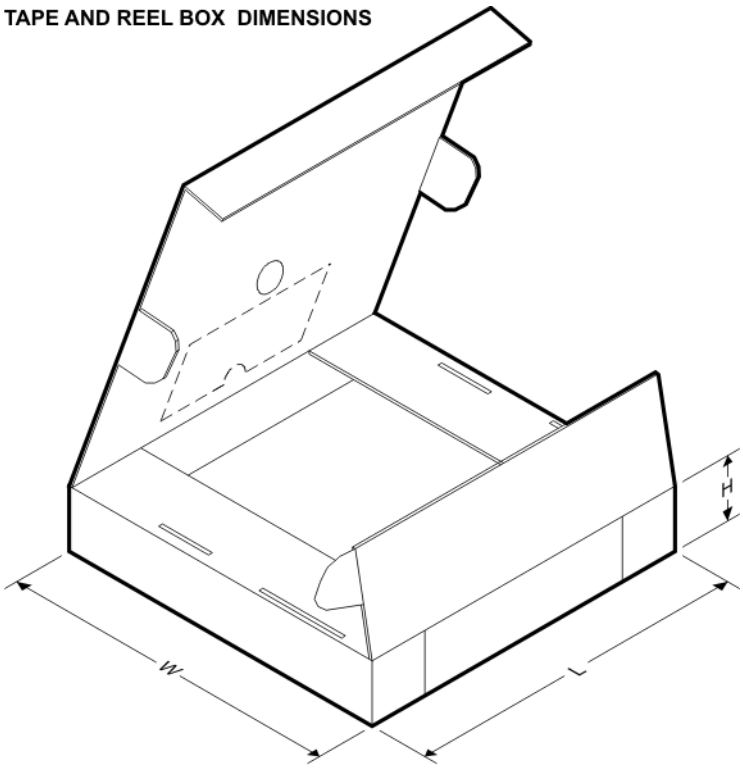

*All dimensions are nominal

Device	Package Type	Package Drawing	Pins	SPQ	Length (mm)	Width (mm)	Height (mm)
TLV341AIDBVR	SOT-23	DBV	6	3000	203.0	203.0	35.0
TLV341AIDBVT	SOT-23	DBV	6	250	203.0	203.0	35.0
TLV341AIDCKR	SC70	DCK	6	3000	203.0	203.0	35.0
TLV341AIDCKT	SC70	DCK	6	250	203.0	203.0	35.0
TLV341IDBVR	SOT-23	DBV	6	3000	203.0	203.0	35.0
TLV341IDCKR	SC70	DCK	6	3000	203.0	203.0	35.0
TLV341IDCKT	SC70	DCK	6	250	203.0	203.0	35.0
TLV341IDRLR	SOT	DRL	6	4000	184.0	184.0	19.0
TLV341IDRLR	SOT	DRL	6	4000	202.0	201.0	28.0
TLV342AIDR	SOIC	D	8	2500	340.5	338.1	20.6
TLV342IDGKR	VSSOP	DGK	8	2500	358.0	335.0	35.0
TLV342IDR	SOIC	D	8	2500	340.5	338.1	20.6
TLV342IRUGR	X2QFN	RUG	10	3000	203.0	203.0	35.0
TLV342SIRUGR	X2QFN	RUG	10	3000	203.0	203.0	35.0

DBV (R-PDSO-G6) PLASTIC SMALL-OUTLINE PACKAGE

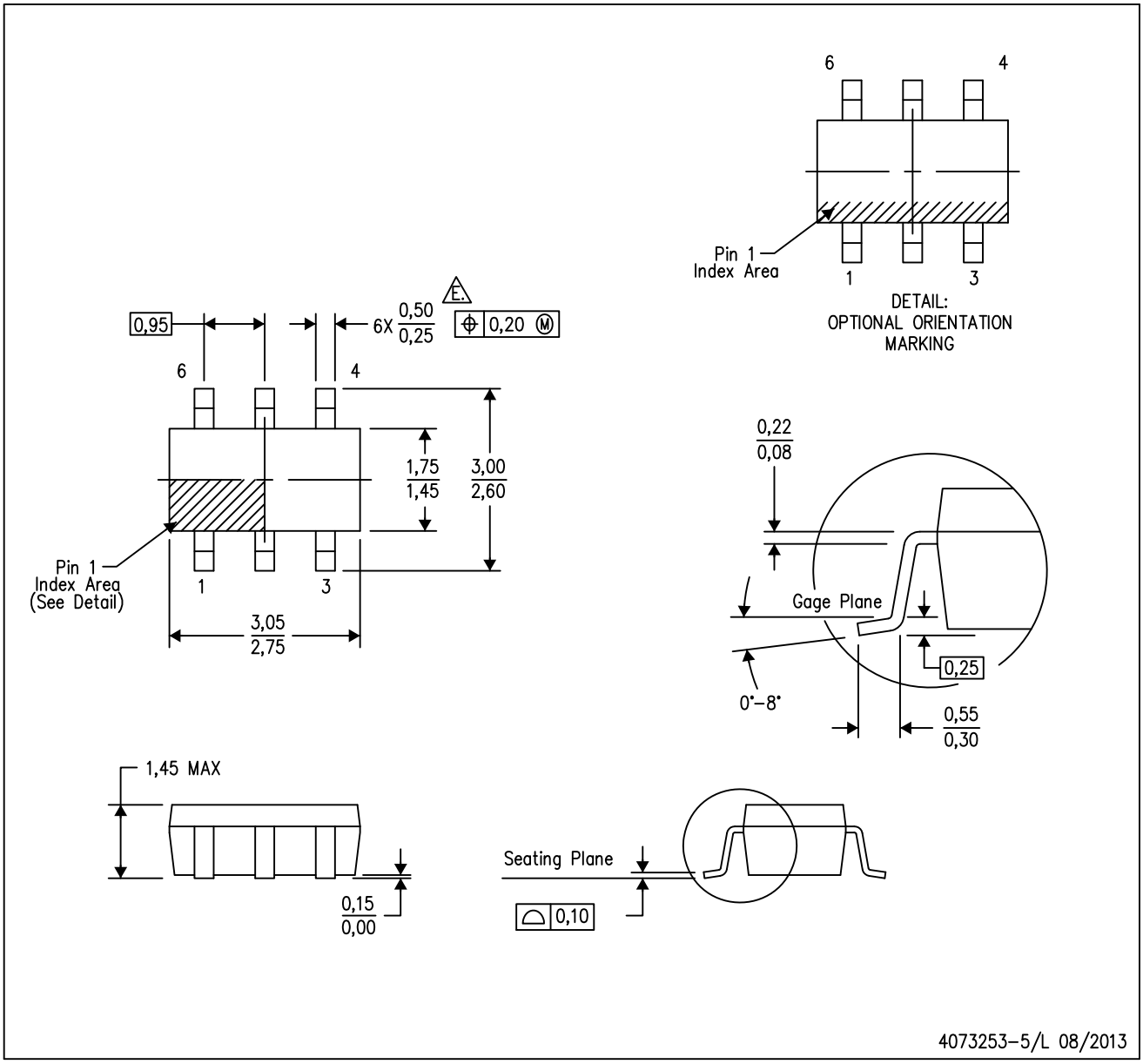

NOTES:
- A. All linear dimensions are in millimeters.
- B. This drawing is subject to change without notice.
- C. Body dimensions do not include mold flash or protrusion. Mold flash and protrusion shall not exceed 0.15 per side.
- D. Leads 1,2,3 may be wider than leads 4,5,6 for package orientation.
- E. Falls within JEDEC MO-178 Variation AB, except minimum lead width.

DBV (R-PDSO-G6) PLASTIC SMALL OUTLINE

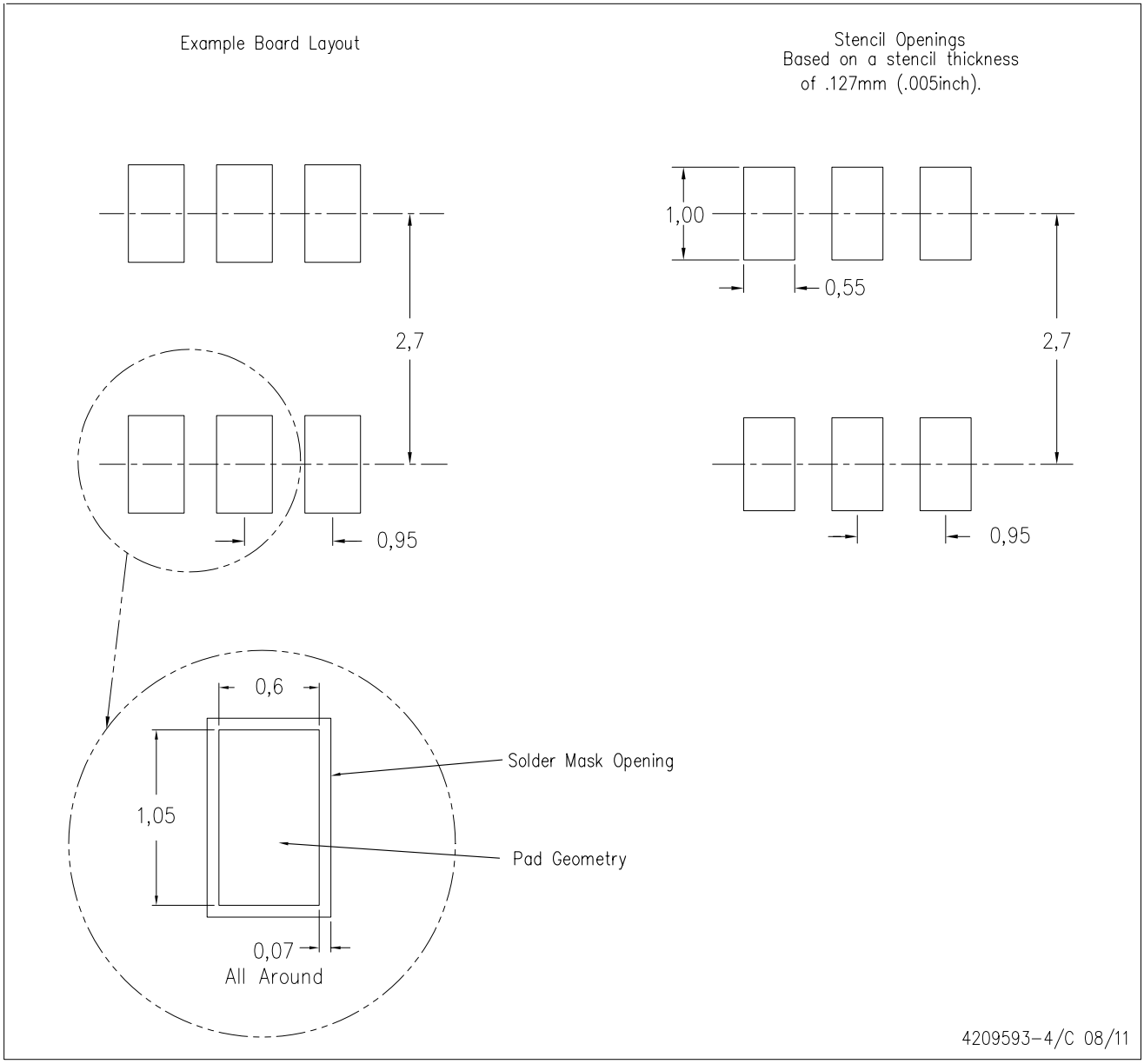

NOTES:
A. All linear dimensions are in millimeters.
B. This drawing is subject to change without notice.
C. Customers should place a note on the circuit board fabrication drawing not to alter the center solder mask defined pad.
D. Publication IPC-7351 is recommended for alternate designs.
E. Laser cutting apertures with trapezoidal walls and also rounding corners will offer better paste release. Customers should contact their board assembly site for stencil design recommendations. Example stencil design based on a 50% volumetric metal load solder paste. Refer to IPC-7525 for other stencil recommendations.

DGK (S–PDSO–G8) PLASTIC SMALL–OUTLINE PACKAGE

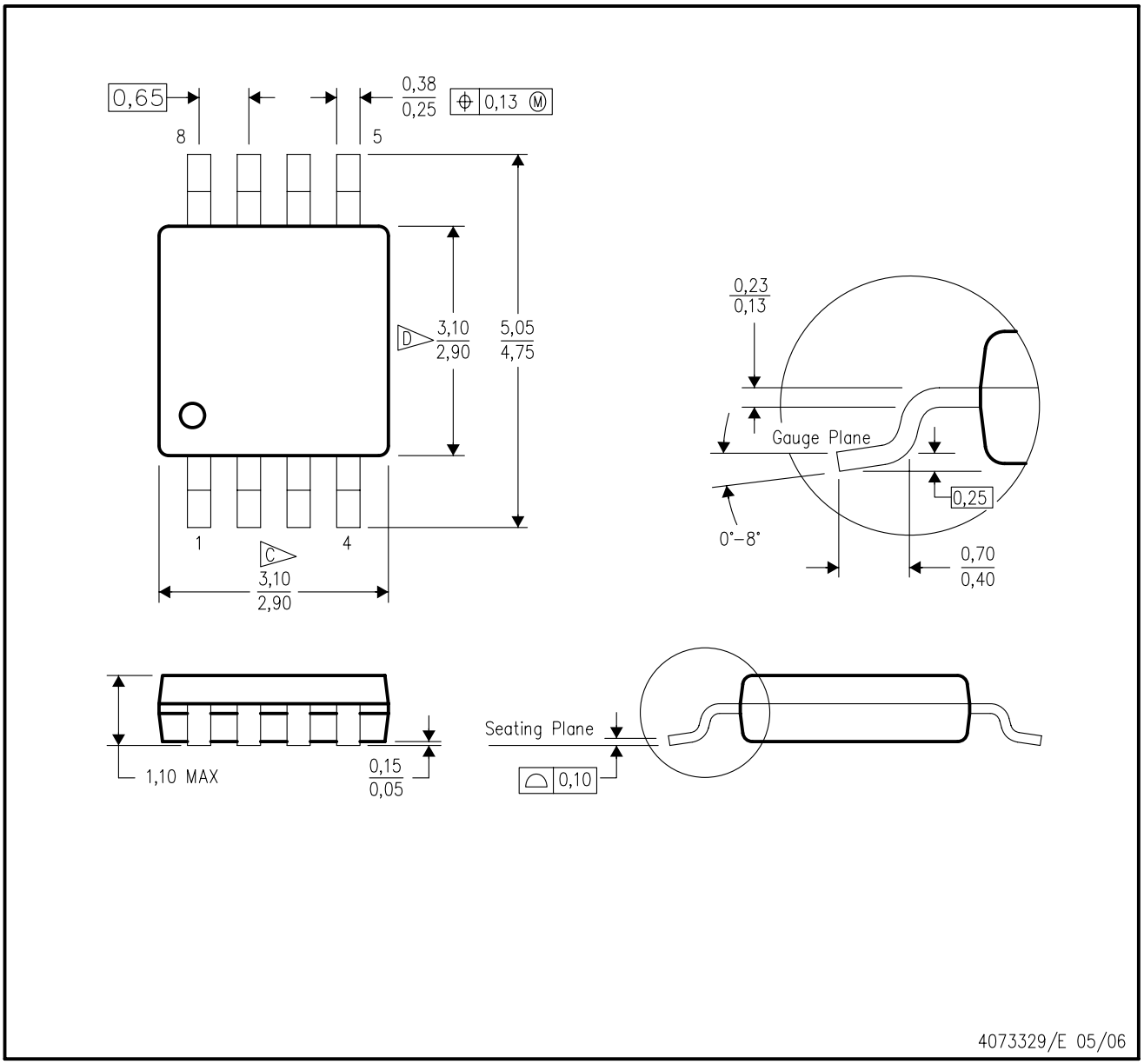

NOTES:
A. All linear dimensions are in millimeters.
B. This drawing is subject to change without notice.
C. Body length does not include mold flash, protrusions, or gate burrs. Mold flash, protrusions, or gate burrs shall not exceed 0.15 per end.
D. Body width does not include interlead flash. Interlead flash shall not exceed 0.50 per side.
E. Falls within JEDEC MO–187 variation AA, except interlead flash.

DCK (R–PDSO–G6) PLASTIC SMALL–OUTLINE PACKAGE

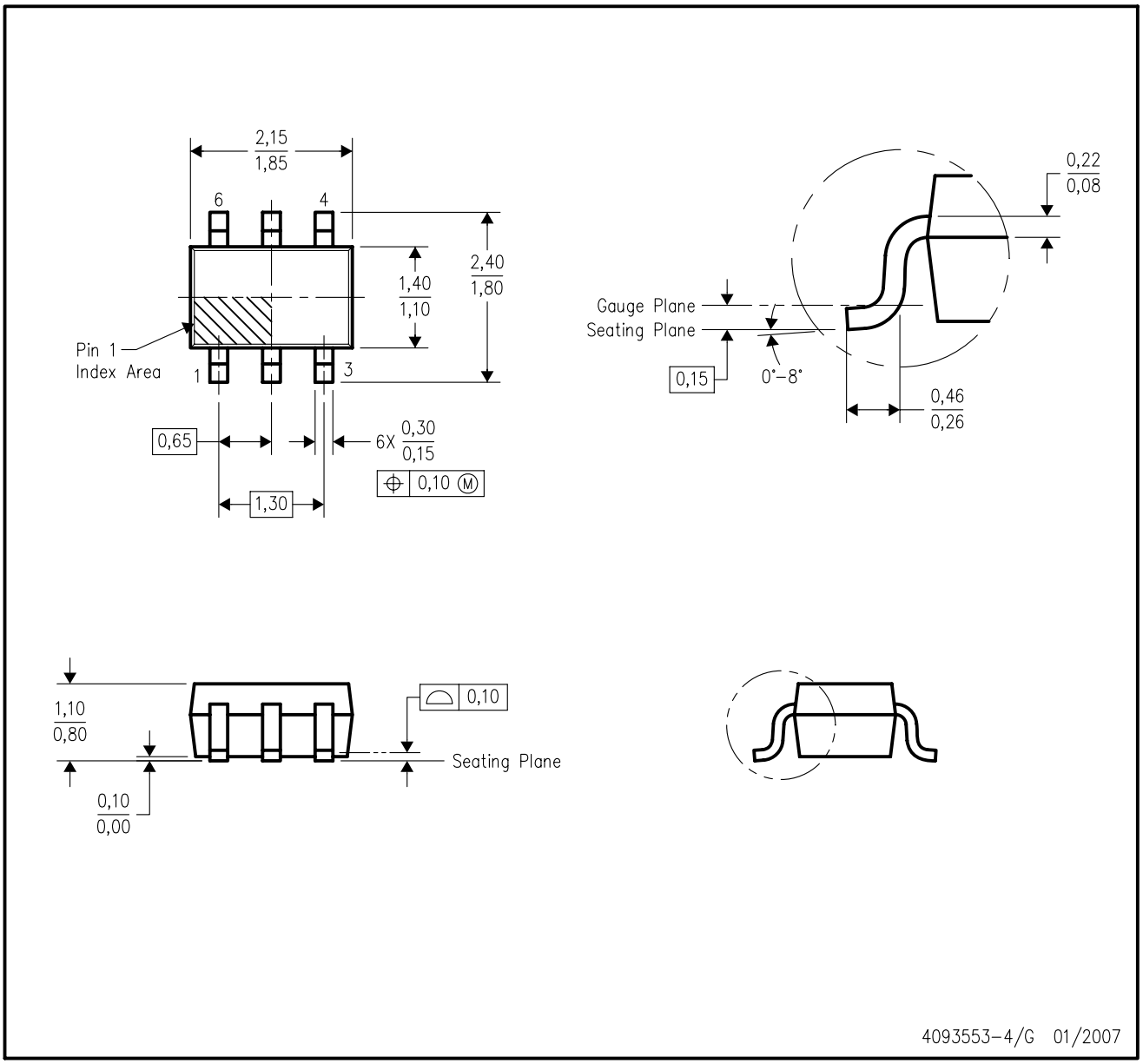

NOTES:
A. All linear dimensions are in millimeters.
B. This drawing is subject to change without notice.
C. Body dimensions do not include mold flash or protrusion. Mold flash and protrusion shall not exceed 0.15 per side.
D. Falls within JEDEC MO–203 variation AB.

DCK (R-PDSO-G6) PLASTIC SMALL OUTLINE

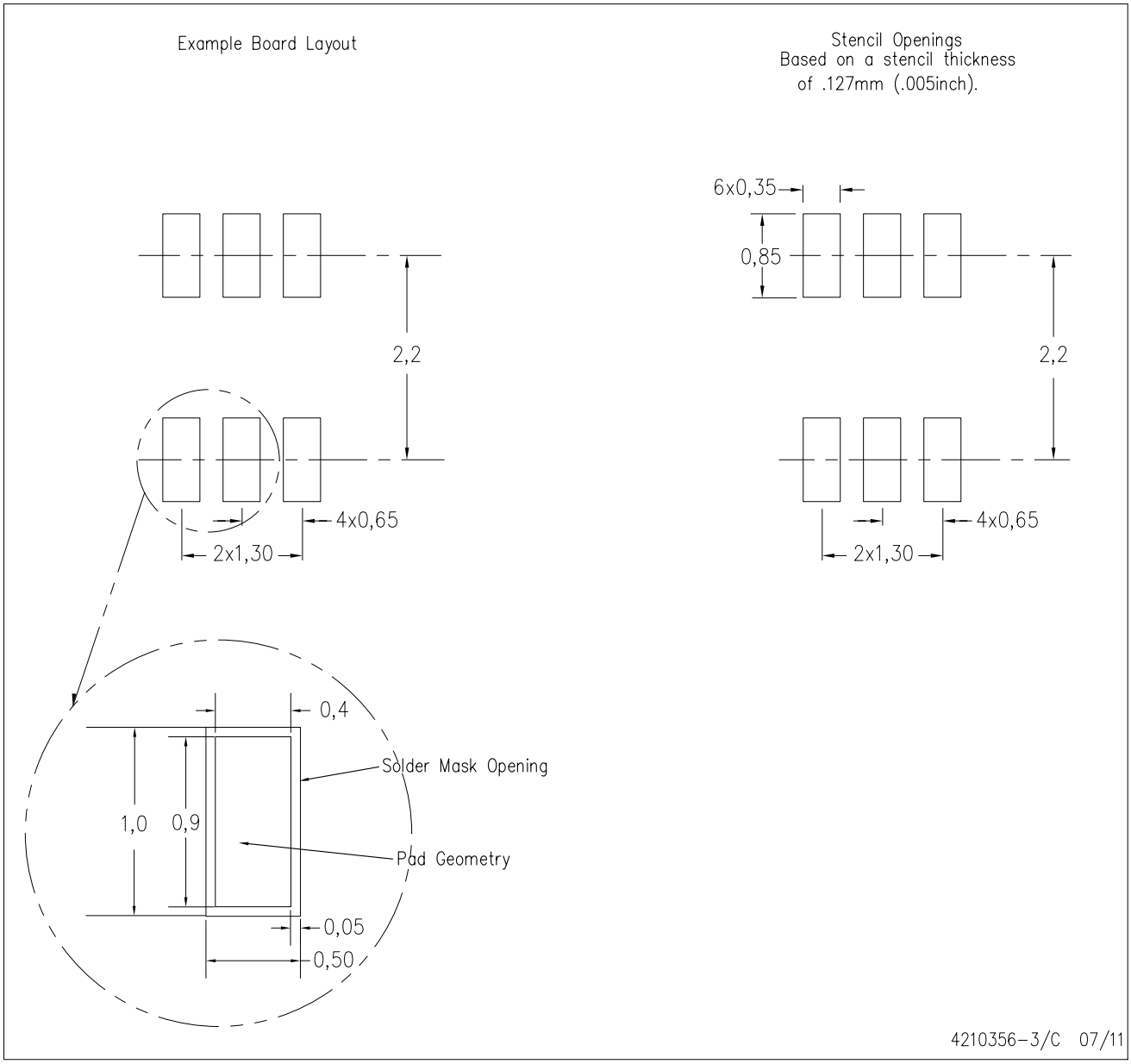

NOTES:
A. All linear dimensions are in millimeters.
B. This drawing is subject to change without notice.
C. Customers should place a note on the circuit board fabrication drawing not to alter the center solder mask defined pad.
D. Publication IPC-7351 is recommended for alternate designs.
E. Laser cutting apertures with trapezoidal walls and also rounding corners will offer better paste release. Customers should contact their board assembly site for stencil design recommendations. Example stencil design based on a 50% volumetric metal load solder paste. Refer to IPC-7525 for other stencil recommendations.

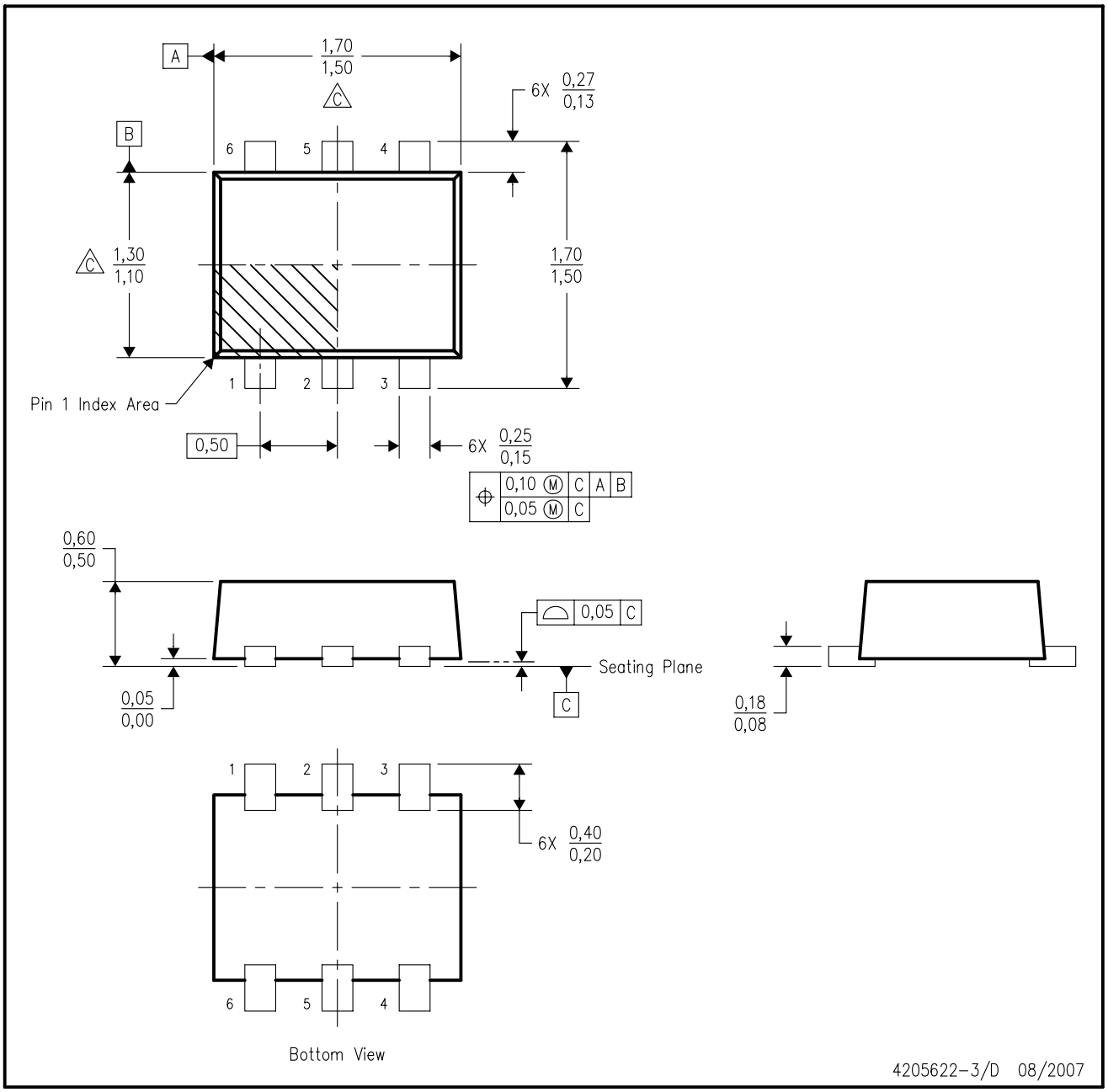

NOTES:
A. All linear dimensions are in millimeters. Dimensioning and tolerancing per ASME Y14.5M–1994.
B. This drawing is subject to change without notice.
C. Body dimensions do not include mold flash, interlead flash, protrusions, or gate burrs. Mold flash, interlead flash, protrusions, or gate burrs shall not exceed 0,15 per end or side.
D. JEDEC package registration is pending.

DRL (R–PDSO–N6) PLASTIC SMALL OUTLINE

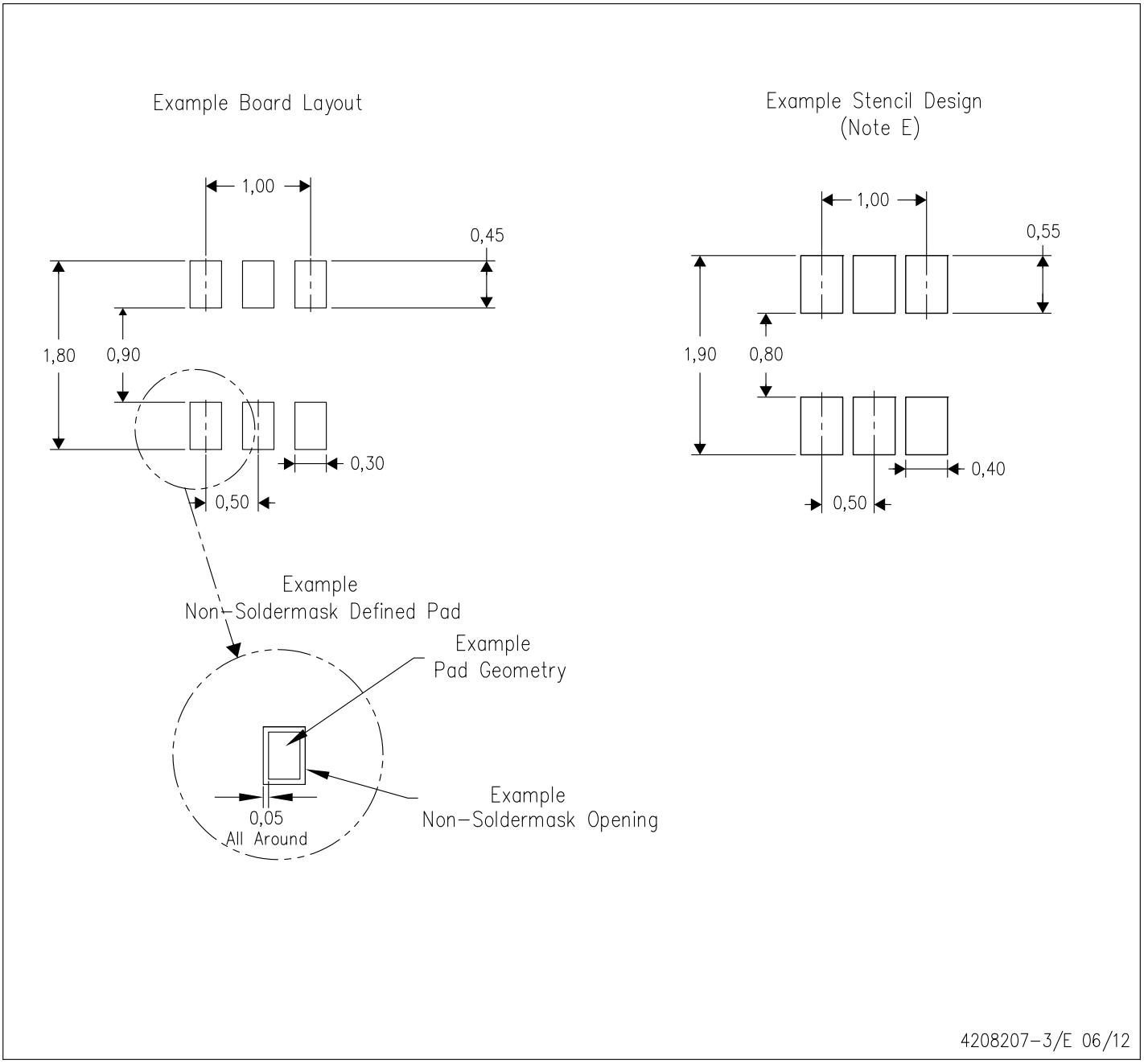

NOTES:
A. All linear dimensions are in millimeters.
B. This drawing is subject to change without notice.
C. Publication IPC–7351 is recommended for alternate designs.
D. Customers should contact their board fabrication site for minimum solder mask web tolerances between signal pads.
E. Maximum stencil thickness 0,127 mm (5 mils). All linear dimensions are in millimeters.
F. Laser cutting apertures with trapezoidal walls and also rounding corners will offer better paste release. Customers should contact their board assembly site for stencil design recommendations. Refer to IPC 7525 for stencil design considerations.
G. Side aperture dimensions over–print land for acceptable area ratio > 0.66. Customer may reduce side aperture dimensions if stencil manufacturing process allows for sufficient release at smaller opening.

RUG (R–PQFP–N10) PLASTIC QUAD FLATPACK

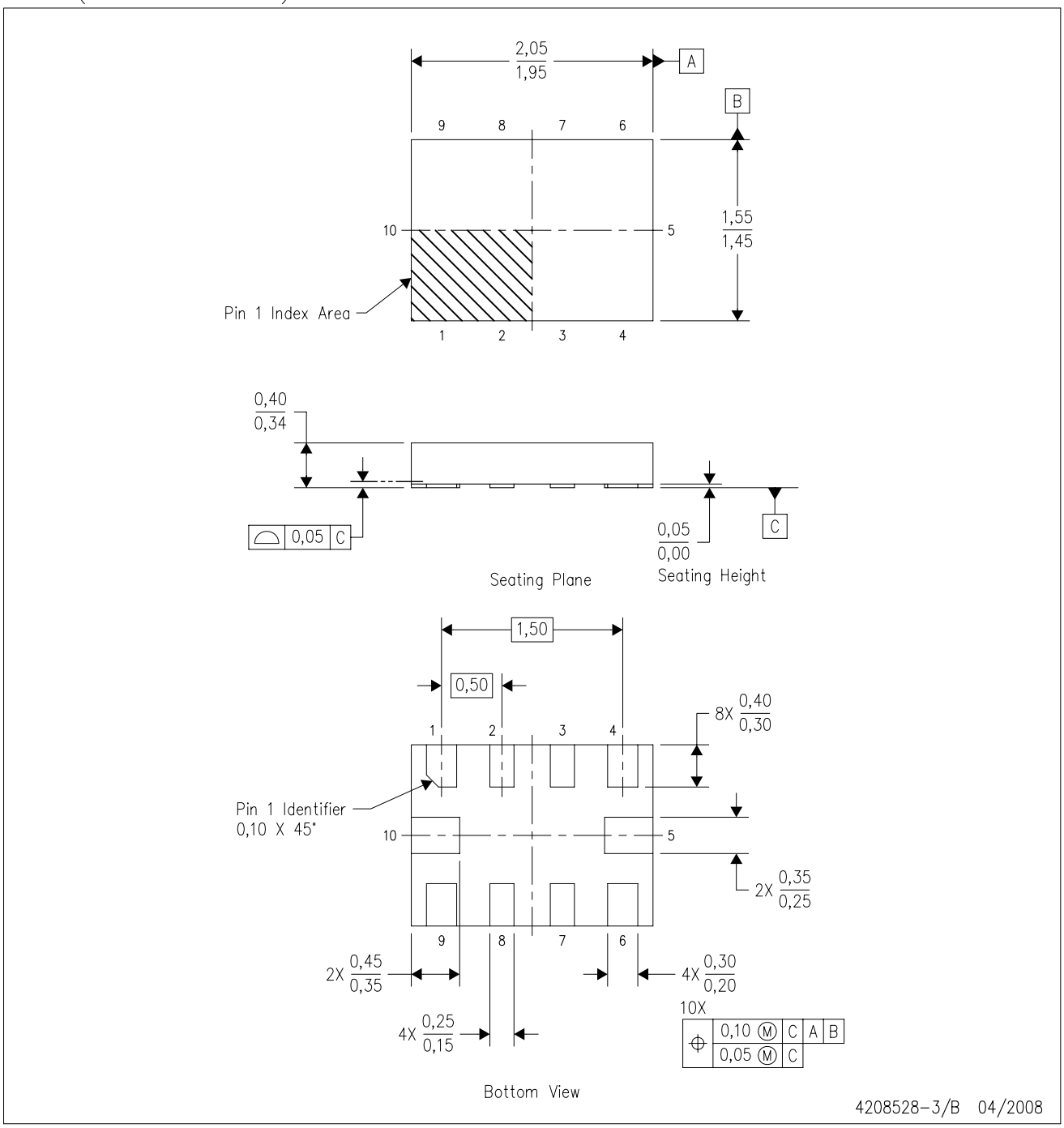

NOTES:
A. All linear dimensions are in millimeters. Dimensioning and tolerancing per ASME Y14.5M–1994.
B. This drawing is subject to change without notice.
C. QFN (Quad Flatpack No–Lead) package configuration.
D. This package complies to JEDEC MO–288 variation X2EFD.

RUG (R–PQFP–N10)

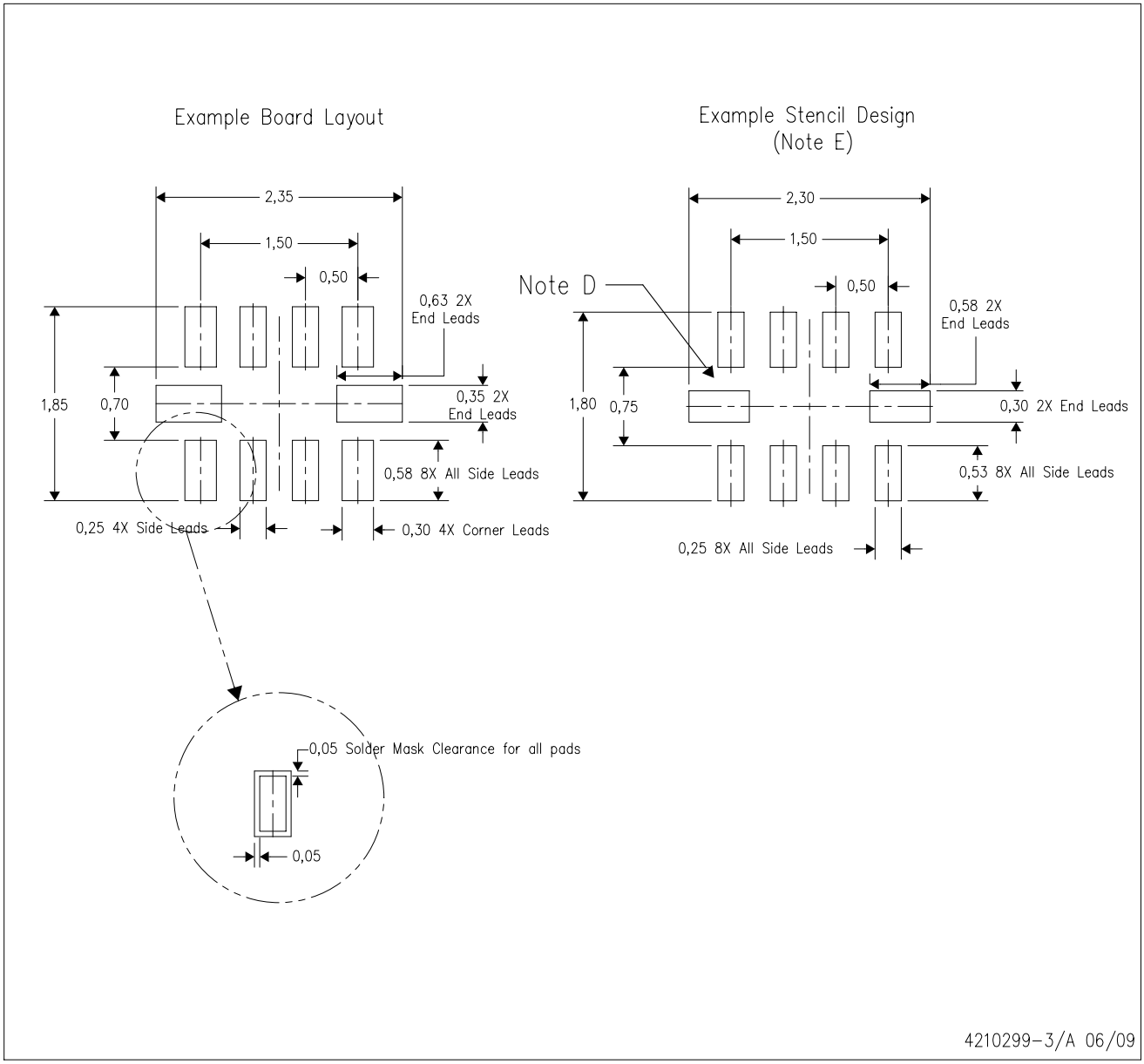

NOTES:
A. All linear dimensions are in millimeters.
B. This drawing is subject to change without notice.
C. Publication IPC–7351 is recommended for alternate designs.
D. Customers should contact their board fabrication site for minimum solder mask web tolerances between signal pads.
E. Maximum stencil thickness 0,127 mm (5 mils). All linear dimensions are in millimeters.
F. Laser cutting apertures with trapezoidal walls and also rounding corners will offer better paste release. Customers should contact their board assembly site for stencil design recommendations. Refer to IPC 7525 for stencil design considerations.
G. Side aperture dimensions over–print land for acceptable area ratio > 0.66. Customer may reduce side aperture dimensions if stencil manufacturing process allows for sufficient release at smaller opening.

D (R–PDSO–G8) PLASTIC SMALL OUTLINE

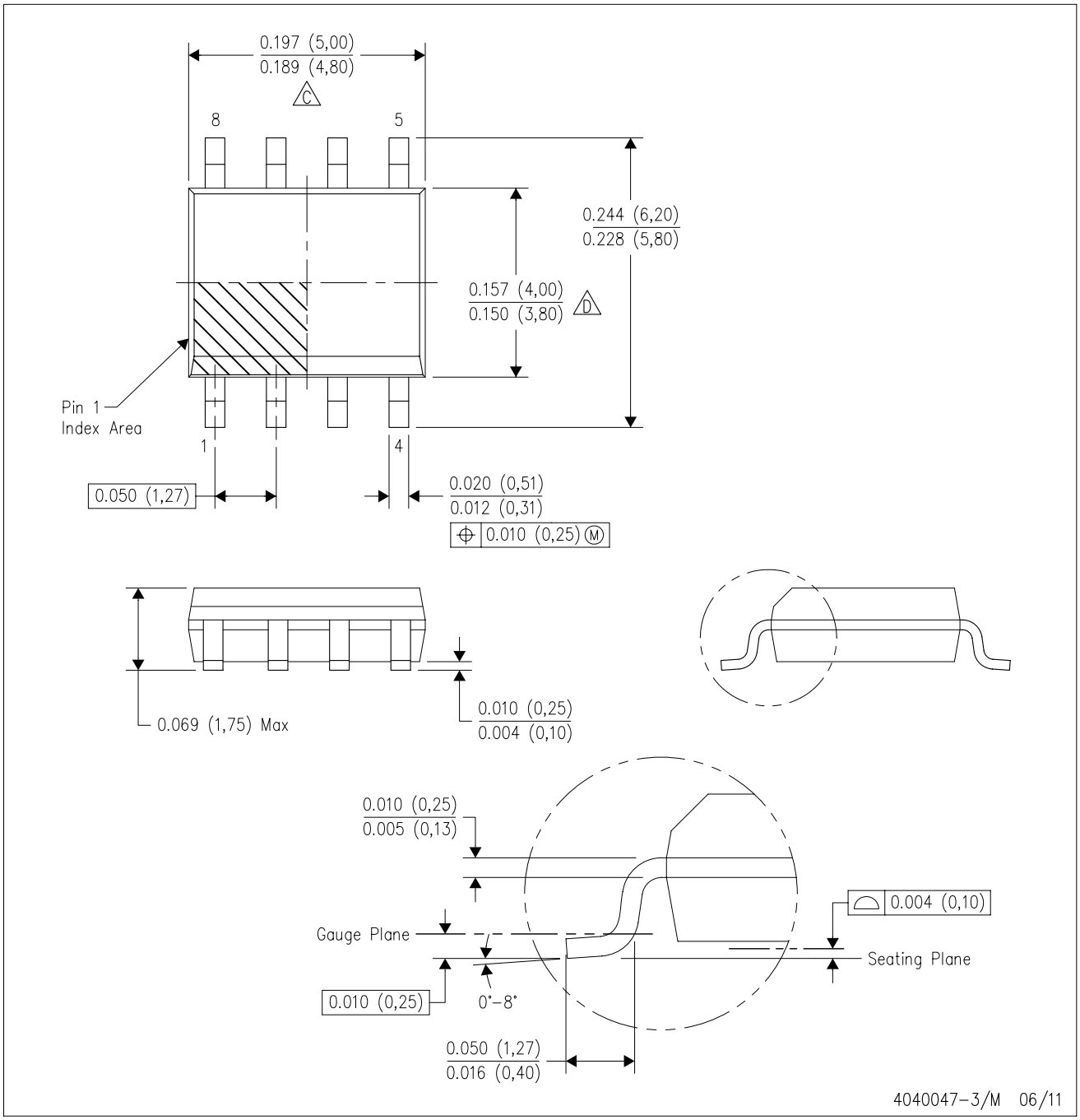

NOTES:
A. All linear dimensions are in inches (millimeters).
B. This drawing is subject to change without notice.
C. Body length does not include mold flash, protrusions, or gate burrs. Mold flash, protrusions, or gate burrs shall not exceed 0.006 (0,15) each side.
D. Body width does not include interlead flash. Interlead flash shall not exceed 0.017 (0,43) each side.
E. Reference JEDEC MS–012 variation AA.

D (R–PDSO–G8) PLASTIC SMALL OUTLINE

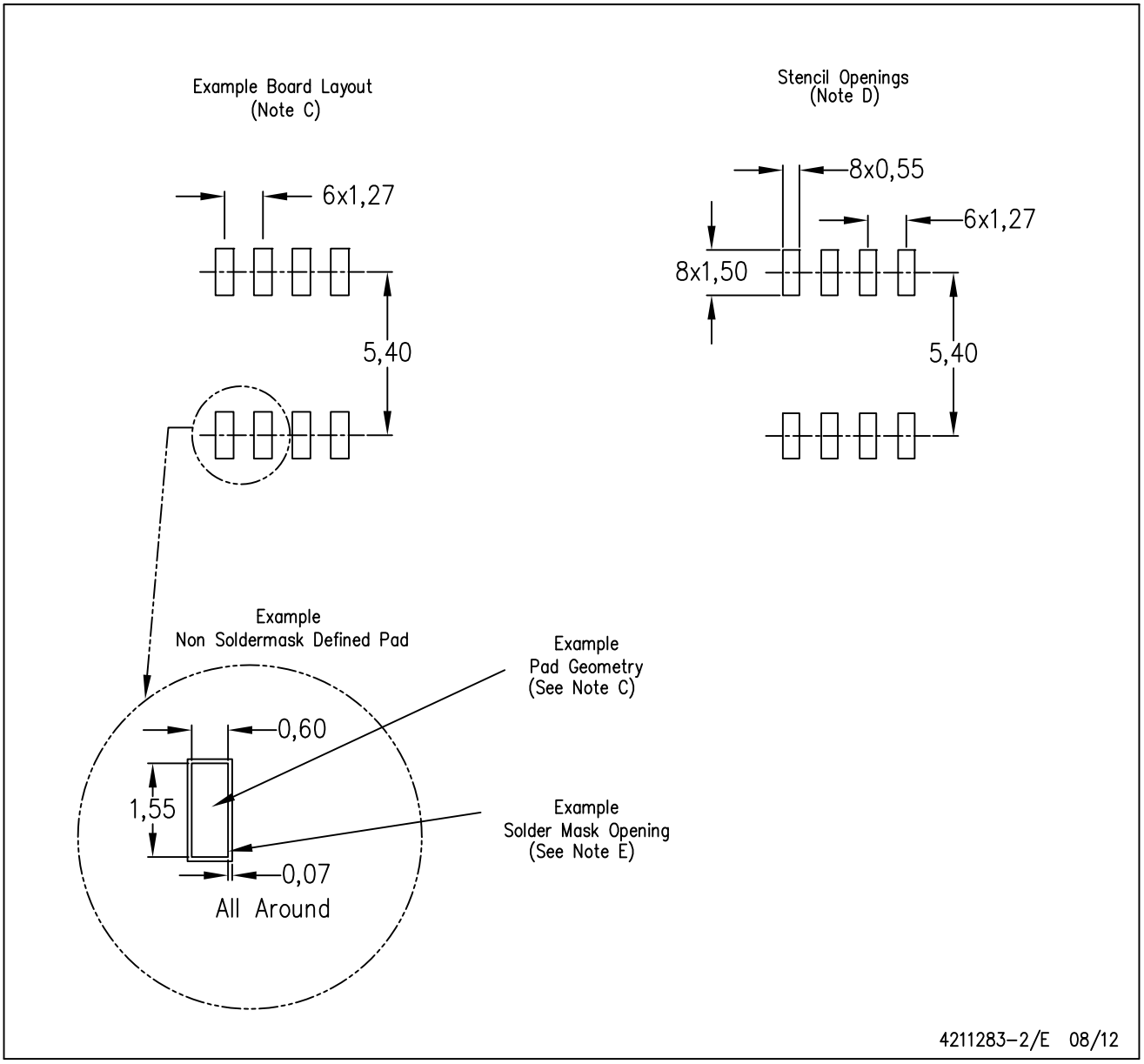

NOTES:
A. All linear dimensions are in millimeters.
B. This drawing is subject to change without notice.
C. Publication IPC–7351 is recommended for alternate designs.
D. Laser cutting apertures with trapezoidal walls and also rounding corners will offer better paste release. Customers should contact their board assembly site for stencil design recommendations. Refer to IPC–7525 for other stencil recommendations.
E. Customers should contact their board fabrication site for solder mask tolerances between and around signal pads.

IMPORTANT NOTICE

Texas Instruments Incorporated and its subsidiaries (TI) reserve the right to make corrections, enhancements, improvements and other changes to its semiconductor products and services per JESD46, latest issue, and to discontinue any product or service per JESD48, latest issue. Buyers should obtain the latest relevant information before placing orders and should verify that such information is current and complete. All semiconductor products (also referred to herein as “components”) are sold subject to TI’s terms and conditions of sale supplied at the time of order acknowledgment.

TI warrants performance of its components to the specifications applicable at the time of sale, in accordance with the warranty in TI’s terms and conditions of sale of semiconductor products. Testing and other quality control techniques are used to the extent TI deems necessary to support this warranty. Except where mandated by applicable law, testing of all parameters of each component is not necessarily performed.

TI assumes no liability for applications assistance or the design of Buyers’ products. Buyers are responsible for their products and applications using TI components. To minimize the risks associated with Buyers’ products and applications, Buyers should provide adequate design and operating safeguards.

TI does not warrant or represent that any license, either express or implied, is granted under any patent right, copyright, mask work right, or other intellectual property right relating to any combination, machine, or process in which TI components or services are used. Information published by TI regarding third-party products or services does not constitute a license to use such products or services or a warranty or endorsement thereof. Use of such information may require a license from a third party under the patents or other intellectual property of the third party, or a license from TI under the patents or other intellectual property of TI.

Reproduction of significant portions of TI information in TI data books or data sheets is permissible only if reproduction is without alteration and is accompanied by all associated warranties, conditions, limitations, and notices. TI is not responsible or liable for such altered documentation. Information of third parties may be subject to additional restrictions.

Resale of TI components or services with statements different from or beyond the parameters stated by TI for that component or service voids all express and any implied warranties for the associated TI component or service and is an unfair and deceptive business practice. TI is not responsible or liable for any such statements.

Buyer acknowledges and agrees that it is solely responsible for compliance with all legal, regulatory and safety-related requirements concerning its products, and any use of TI components in its applications, notwithstanding any applications-related information or support that may be provided by TI. Buyer represents and agrees that it has all the necessary expertise to create and implement safeguards which anticipate dangerous consequences of failures, monitor failures and their consequences, lessen the likelihood of failures that might cause harm and take appropriate remedial actions. Buyer will fully indemnify TI and its representatives against any damages arising out of the use of any TI components in safety-critical applications.

In some cases, TI components may be promoted specifically to facilitate safety-related applications. With such components, TI’s goal is to help enable customers to design and create their own end-product solutions that meet applicable functional safety standards and requirements. Nonetheless, such components are subject to these terms.

No TI components are authorized for use in FDA Class III (or similar life-critical medical equipment) unless authorized officers of the parties have executed a special agreement specifically governing such use.

Only those TI components which TI has specifically designated as military grade or “enhanced plastic” are designed and intended for use in military/aerospace applications or environments. Buyer acknowledges and agrees that any military or aerospace use of TI components which have ***not*** been so designated is solely at the Buyer's risk, and that Buyer is solely responsible for compliance with all legal and regulatory requirements in connection with such use.

TI has specifically designated certain components as meeting ISO/TS16949 requirements, mainly for automotive use. In any case of use of non-designated products, TI will not be responsible for any failure to meet ISO/TS16949.

Products		**Applications**	
Audio	www.ti.com/audio	Automotive and Transportation	www.ti.com/automotive
Amplifiers	amplifier.ti.com	Communications and Telecom	www.ti.com/communications
Data Converters	dataconverter.ti.com	Computers and Peripherals	www.ti.com/computers
DLP® Products	www.dlp.com	Consumer Electronics	www.ti.com/consumer-apps
DSP	dsp.ti.com	Energy and Lighting	www.ti.com/energy
Clocks and Timers	www.ti.com/clocks	Industrial	www.ti.com/industrial
Interface	interface.ti.com	Medical	www.ti.com/medical
Logic	logic.ti.com	Security	www.ti.com/security
Power Mgmt	power.ti.com	Space, Avionics and Defense	www.ti.com/space-avionics-defense
Microcontrollers	microcontroller.ti.com	Video and Imaging	www.ti.com/video
RFID	www.ti-rfid.com		
OMAP Applications Processors	www.ti.com/omap	**TI E2E Community**	e2e.ti.com
Wireless Connectivity	www.ti.com/wirelessconnectivity		

Mailing Address: Texas Instruments, Post Office Box 655303, Dallas, Texas 75265
Copyright © 2014, Texas Instruments Incorporated