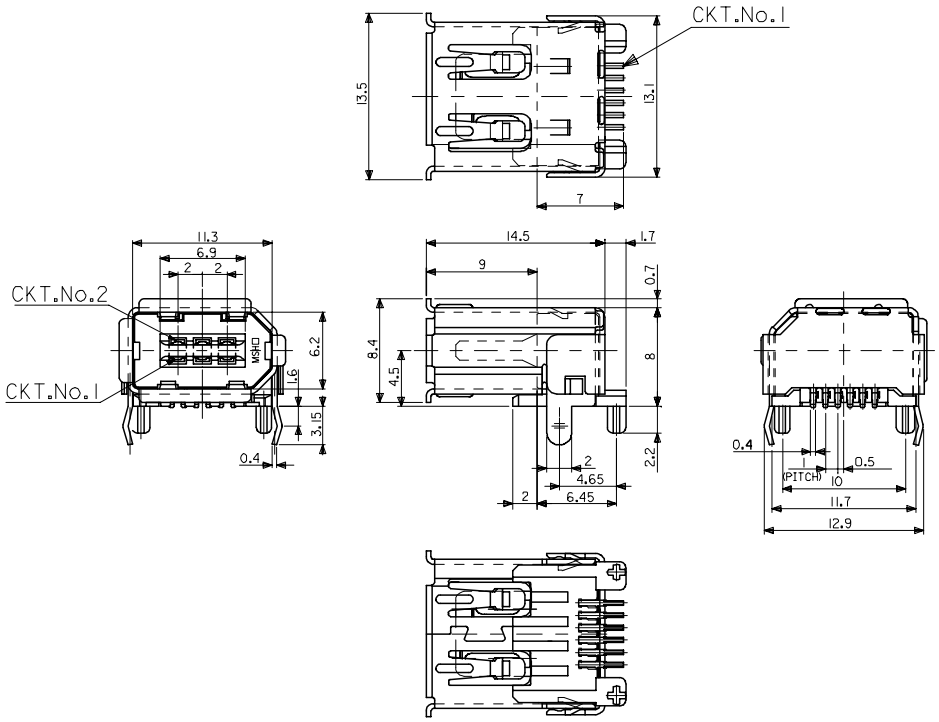

NOTES:

1. MATERIAL :
   WAFER : HIGH TEMPERATURE NYLON, GLASS FILLED, UL94V-0, COLOR : BLACK
   PIN : BRASS
   SHELL : COPPER ALLOY
2. PLATING :
   PIN
   CONTACT AREA : GOLD 0.76 MICROMETER MINIMUM.
   SOLDERTAIL AREA : TIN 1 MICROMETER MINIMUM.
   UNDER-PLATING : NICKEL 2 MICROMETER MINIMUM.
   SHELL
   (a.)NICKEL : 2.5 MICROMETER MINIMUM.
   UNDER-PLATING : Cu 1 MICROMETER MINIMUM.
   (b.)GOLD FLASH : 0.025 MICROMETER MINIMUM.
   UNDER-PLATING : NICKEL 1.27 MICROMETER MINIMUM.
3. PRODUCT SPECIFICATION REFER TO PS-67430-001.

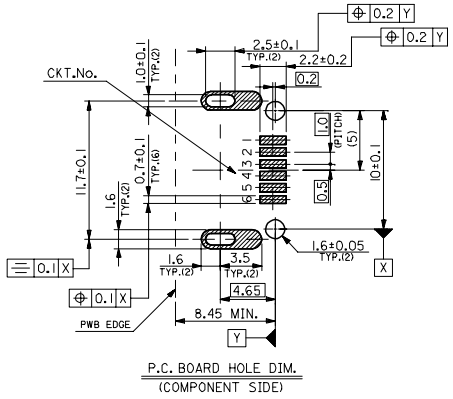

P.C. BOARD HOLE DIM.
(COMPONENT SIDE)

PARTS NUMBER	NOTES
67354-0000	SHELL PALTING : NICKEL
67354-0010	SHELL PALTING : GOLD FLASH

LEAD FREE
EC NO: SH2005-0048 2004/09/17
DRWN:RZHANG 2004/09/20
CH'KD: 2004/09/20
APPR:SHUANG 2004/09/20
DESCRIPTION
D
REV

QUALITY SYMBOLS
▼=0
(C)=0

GENERAL TOLERANCES (UNLESS SPECIFIED)

	mm	INCH
4 PLACES	± ---	± ---
3 PLACES	± ---	± ---
2 PLACES	± 0.25	± ---
1 PLACE	± 0.25	± ---
ANGULAR ± 3 °		

DRAFT WHERE APPLICABLE MUST REMAIN WITHIN DIMENSIONS

DIMENSION STYLE: MM ONLY
SCALE: ---
DESIGN UNITS: METRIC
THIRD ANGLE PROJECTION

DRAWN BY	G. WANG	DATE 2000/02/02
CHECKED BY	WILSON	DATE 2000/02/02
APPROVED BY	ML IN	DATE 2000/02/02

TITLE: 2.0 I/O CONN. SOCKET RIGHT-ANGLE WITH KINK

molex MOLEX INCORPORATED

MATERIAL NO.: SEE CHART
DOCUMENT NO.: SD-67354-002
SHEET NO.: 1 OF 1
SIZE: A3

THIS DRAWING CONTAINS INFORMATION THAT IS PROPRIETARY TO MOLEX INCORPORATED AND SHOULD NOT BE USED WITHOUT WRITTEN PERMISSION