THIS DRAWING IS UNPUBLISHED. RELEASED FOR PUBLICATION 20
© COPYRIGHT 20 BY TYCO ELECTRONICS CORPORATION. ALL RIGHTS RESERVED.

LOC	DIST
GP	00

REVISIONS

P	LTR	DESCRIPTION	DATE	DWN	APVD
	I	REV PER 0S12-0055-05	25JAN2005	RG	MP
	A	RELEASED PER 0S15-0019-05	05APR2005	RG	PD
	B	REV PER 0S15-0090-05	13MAY2005	RG	PD
	BI	REV PER ECO-14-002957	28FEB2014	OL	SZ

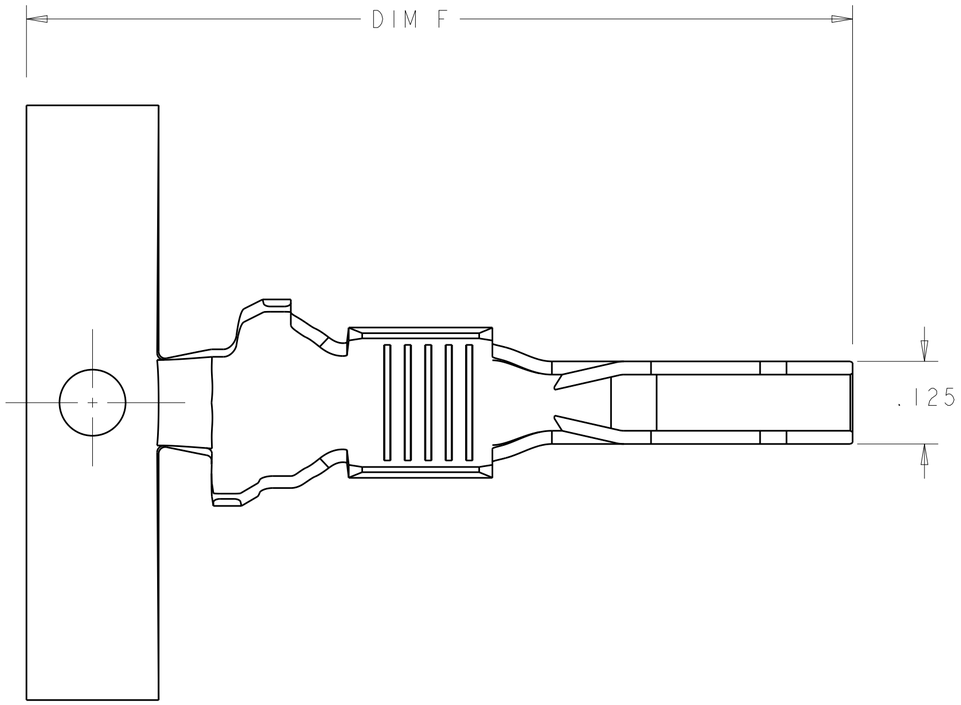

1. WIRE RANGE: 8 - 10 AWG
2. INSULATION RANGE: .176 - .272
3. FINISH: NICKEL PLATE ALL OVER 0.000050 MIN THICK
4. FINISH: NOBLE METAL PLATING ON CONTACT FUNCTIONAL AREA
5. FINISH: TIN IN AREA INDICATED 0.000050 - 0.000100 THK.
6. MATERIAL: HIGH CONDUCTIVITY COPPER ALLOY
7. FINISH: TIN-LEAD IN AREA INDICATED 0.000050 - 0.000100 THK.

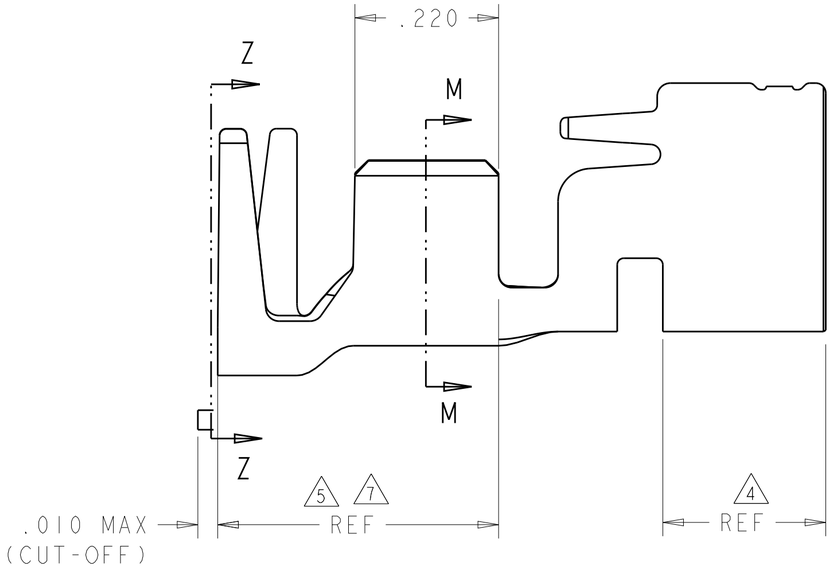

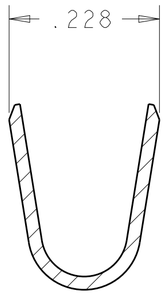

SECTION M-M

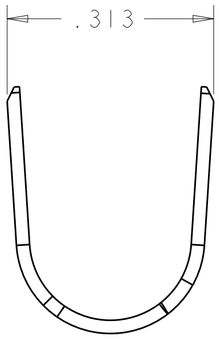

SECTION Z-Z

DIM F REF	FINISH	DESCRIPTION	PART NUMBER
1.200	3 4 5	STD	1-1600960-8
1.250	3 4 5	MFBL	1-1600960-7
1.200	3 4 7	STD	1-1600960-0
1.250	3 4 7	MFBL	1600960-9

THIS DRAWING IS A CONTROLLED DOCUMENT FOR TYCO ELECTRONICS CORPORATION. IT IS SUBJECT TO CHANGE AND THE CONTROLLING ENGINEERING ORGANIZATION SHOULD BE CONTACTED FOR THE LATEST REVISION.

DIMENSIONS: INCHES

TOLERANCES UNLESS OTHERWISE SPECIFIED:

0 PLC	±-
1 PLC	±-
2 PLC	±.10
3 PLC	±.005
4 PLC	±.0020
ANGLES	±-

MATERIAL: SEE NOTES

FINISH: SEE NOTES

DWN R.GRZYBOWSKI 19JAN2005
CHK P.D'AMATO -
APVD P.D'AMATO -
PRODUCT SPEC 108-2157
APPLICATION SPEC 114-13112
WEIGHT -

CUSTOMER DRAWING

tyco Electronics
Tyco Electronics
Harrisburg, PA 17105-3608

NAME VERTICAL BULKHEAD CABLE RECEPTACLE POWER CONTACT MULTI-BEAM XL

SIZE	CAGE CODE	DRAWING NO	RESTRICTED TO
A2	00779	C-1600960	-

SCALE 8:1 SHEET 1 OF 1 REV BI