THIS DRAWING IS UNPUBLISHED. RELEASED FOR PUBLICATION -,- .
© COPYRIGHT - BY TYCO ELECTRONICS CORPORATION. ALL RIGHTS RESERVED.

LOC	DIST
G	14

REVISIONS

P	LTR	DESCRIPTION	DATE	DWN	APVD
	N	REL PER ECR 09-005119	06MAR09	JR	RL

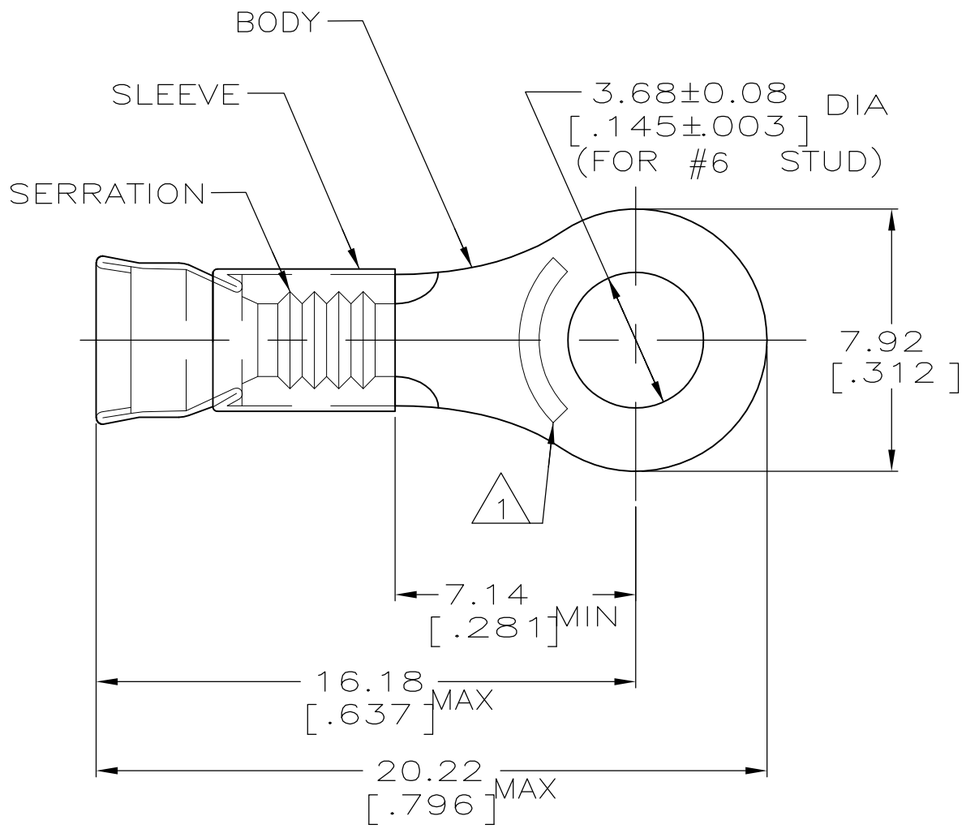

1. SEE TABLE FOR STAMPING
22-16 TERMINALS ARE STAMPED 22-18 IN ACCORDANCE WITH MILITARY SPEC MIL-T-7928
COMMERCIAL WIRE RANGE IS 22-16

2. WIRE INSUL DIA, 2.67-3.56 [.105-.140]

3. TONGUE MATL THK, 0.79±0.05 [.031±.002]

4. PRELIMINARY - NOT FOR PRODUCTION

	STAMPING	BODY MATERIAL	SLV COLOR	QTY	PACKAGE TYPE	PART NO
	AMP 22-18AL	ALUMEL	GREEN	1000	LOOSE PIECE	2-322873-5
4	AMP 22-18	NICKEL PER ASTM B162	ORANGE	5000	ON TAPE, REEL	2-322873-4
	AMP 22-18CH	CHROMEL	GRAY	1000	LOOSE PIECE	2-322873-1
	AMP 22-18	NICKEL PER ASTM B162	ORANGE	1000	LOOSE PIECE	322873

AMP INCORPORATED
CUSTOMER SERVICE SYSTEM

FOR ADDITIONAL PRODUCT INFORMATION OR COPIES OF DRAWINGS AND TECHNICAL DOCUMENTS	PRODUCT INFORMATION CENTER 1-800-522-6752
FOR APPLICATION TOOLING INFORMATION	TOOLING ASSISTANCE CENTER 1-800-722-1111
FOR ORDER ENTRY	1-800-526-5142

MAX RECOMMENDED OPERATING TEMPERATURE: 649° C [1200° F]

VOLTAGE RATING: - -

CIRCULAR MIL AREA: 0.26mm² - 1.65mm² [509-3260]

STRANDED WIRE

THIS DRAWING IS A CONTROLLED DOCUMENT.

DIMENSIONS: mm [INCHES]

TOLERANCES UNLESS OTHERWISE SPECIFIED:

0 PLC	± -
1 PLC	± -
2 PLC	± 0.20 [.008]
3 PLC	± -
4 PLC	± -
ANGLES	± -

MATERIAL: BODY, SEE TABLE SLEEVE, Ni SIL PER ASTM B122

FINISH: SLV COLOR, SEE TABLE

DWN	L OLMEDA	10OCT94
CHK	M ELLIS	10OCT94
APVD	S BORTNER	10OCT94
PRODUCT SPEC	—	
APPLICATION SPEC	—	
WEIGHT	—	

Tyco Electronics
Tyco Electronics Corporation
Harrisburg, PA 17105-3608

NAME: TERMINAL, RING TONGUE, STRATOTHERM, DIAMOND GRIP, WIRE SIZE, 22-16 AWG

SIZE	CAGE CODE	DRAWING NO	RESTRICTED TO
A3	00779	C-322873	—

CUSTOMER DRAWING | SCALE 6:1 | SHEET 1 OF 1 | REV N