THIS DRAWING IS UNPUBLISHED. RELEASED FOR PUBLICATION -,- .
© COPYRIGHT - By - ALL RIGHTS RESERVED.

LOC	DIST
G	14

REVISIONS

P	LTR	DESCRIPTION	DATE	DWN	APVD
	G1	REVISED PER ECO-13-015437	01OCT2013	KH	DR

1. COPPER PER ASTM B-152, .091±.004 THK, ANNEALED
2. TIN PLATE PER ASTM B-545

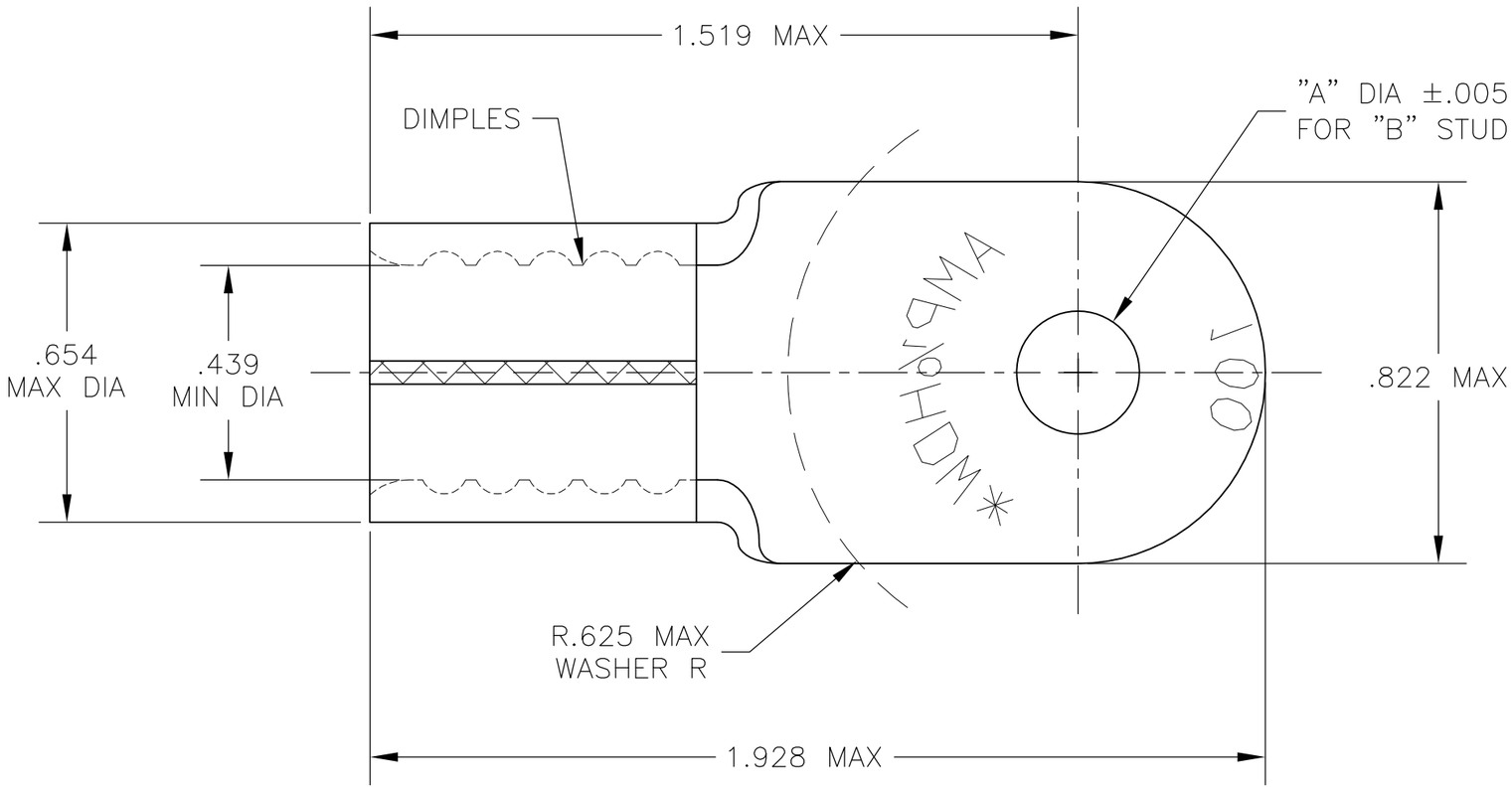

	STUD "B"	DIM "A"	PART NO
	1/2	.515	1-331880-1
	3/8	.390	1-331880-0
OBSOLETE	~~1/4~~	~~.265~~	~~331880~~

THIS DRAWING IS A CONTROLLED DOCUMENT.

DIMENSIONS: INCHES

TOLERANCES UNLESS OTHERWISE SPECIFIED:

0 PLC	± -
1 PLC	± -
2 PLC	± -
3 PLC	± .008
4 PLC	± -
ANGLES	± 5°

MATERIAL - 1

FINISH - 2

DWN	jr ruth	07JUN04
CHK	MJ SPICER	07JUN04
APVD	MJ SPICER	07JUN04
PRODUCT SPEC	—	
APPLICATION SPEC	—	
WEIGHT	—	

TE Connectivity

NAME: WIRE TERMINAL SOLISTRAND, RING TONGUE, WIRE SIZE : 1/0 HD

SIZE	CAGE CODE	DRAWING NO	RESTRICTED TO
A3	00779	C-331880	—

CUSTOMER DRAWING | SCALE 3:1 | SHEET 1 OF 1 | REV G1

1470-19 (3/11)