REVISIONS			
REV	DESCRIPTION	DATE	APPROVED
02_1	SEE GEN ECN NO. 80-0084	F.N. 5-25-82	DAS 5-27-82
02_2	REDRAWN AND UPDATED ON CAD PER ECN NO. 88-0678	M.C. 3-27-89	PJH
02_3	SILICONE RUBBER PER ZZ-R-765 WAS VITON PER MIL-R25897 PER ECN 90-0512-1	EFH 8/8/90	M.Y. 8-20-90

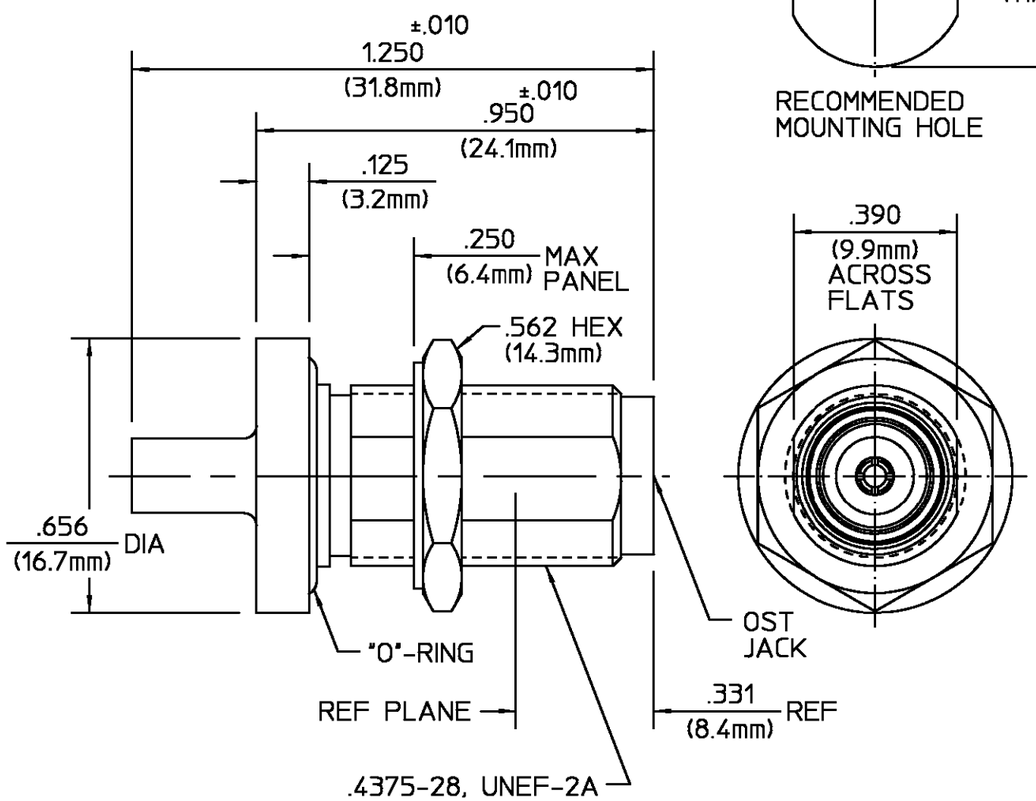

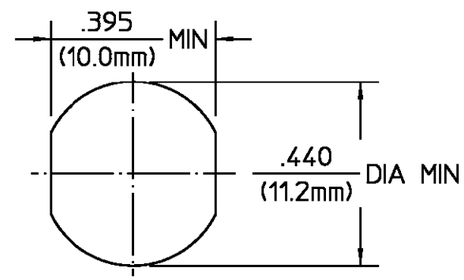

RECOMMENDED MOUNTING HOLE

COMPONENT	MATERIAL	FINISH
HOUSING MOUNTING NUT BUSHING	STAINLESS STEEL PER ASTM-A484 AND ASTM-A582, TYPE 303	GOLD PLATE PER MIL-G-45204 OVER NICKEL PLATE PER QQ-N-290
DIELECTRIC	TFE FLUOROCARBON PER MIL-P-19468 AND FED SPEC L-P-403	N/A
CENTER CONTACT	BERYLLIUM COPPER PER QQ-C-530, ALLOY 173	GOLD PLATE PER MIL-G-45204 OVER COPPER PLATE PER MIL-C-14550
LOCKWASHER	PHOSPHOR BRONZE PER QQ-B-750, GRADE 2B	GOLD PLATE PER MIL-G-45204 OVER COPPER PLATE PER MIL-C-14550
"O"- RING	SILICONE RUBBER PER ZZ-R-765	N/A

NOTES:

1. DESIGNED FOR USE WITH .141 SEMI RIGID CABLE

CABLE ENTRY DIAMETER MINIMUM	
HOUSING	.142
CONTACT	.0364

UNLESS OTHERWISE SPECIFIED DIMENSIONS ARE IN INCHES
TOLERANCE ON
FRAC. ± 1/64 DEC. ±.005 ANGLES ± 1°

These drawings and specifications are the property of Omni Spectra Incorporated and shall not be reproduced or copied or used in whole or in part as the basis for the manufacture or sale of item(s) without written permission.

DRAWN BY M.CATIZONE DATE 3-27-89
CHECKED BY L.ROSS 3-28-89
APP'D BY PJH 3-28-89

USE ASS'Y PROCEDURE

NO. A.P. 408-08206 (31-007)

AMP

AMP Incorporated
140 Fourth Avenue
Waltham, MA 02451-7599

TITLE OST BULKHEAD FEEDTHROUGH CABLE JACK-DIRECT SOLDER ATTACHMENT

SIZE	CODE IDENT NO.		REV
B	26805	3104-5068-00	02_3
SCALE 3:1			SHEET 1 OF 1

CUSTOMER DRAWING

AMP PART # 1313535-1
SHEET 1 OF 1 REV A