NHD-2.4-240320SF-CTXI#-F1

TFT (Thin-Film Transistor) Liquid Crystal Display Module

NHD-	Newhaven Display
2.4-	2.4” Diagonal
240320-	240 x 320 Pixels (Portrait Mode)
SF-	Model
C-	Built-in Controller
T-	White LED Backlight
X-	TFT
I-	12:00 Optimal View, Wide Temperature
#-	**RoHS Compliant**
F-	FFC ZIF Connection Style
1-	ILI9341 Controller

Newhaven Display International, Inc.

2511 Technology Drive, Suite 101

Elgin IL, 60124

Ph: 847-844-8795 Fax: 847-844-8796

www.newhavendisplay.com

nhtech@newhavendisplay.com nhsales@newhavendisplay.com

Document Revision History

Revision	Date	Description	Changed by
0	9/20/2010	Initial Release	BE
1	5/9/2012	Timing characteristics updated	AK
2	12/10/2012	Added wiring diagram. Updated mechanical drawing & electrical characteristics.	JN
3	5/29/2013	Controller changed from ILI9340 to ILI9341	AK
4	10/10/2013	Mechanical Drawing, Pin Description, Wiring Diagram, Electrical/Optical Characteristics, Example Code updated	ML
5	4/21/2014	Changed optimal viewing direction in datasheet	ML

Functions and Features

- **240 x 320 pixels**
- **LED backlight**
- **2.8V power supply**
- **8-bit or 16-bit Parallel MPU interface**
- **FFC ZIF I/O connection**
- **Built-in ILI9341 controller**
- **262K colors**
- **Touch Panel available**

Mechanical Drawing

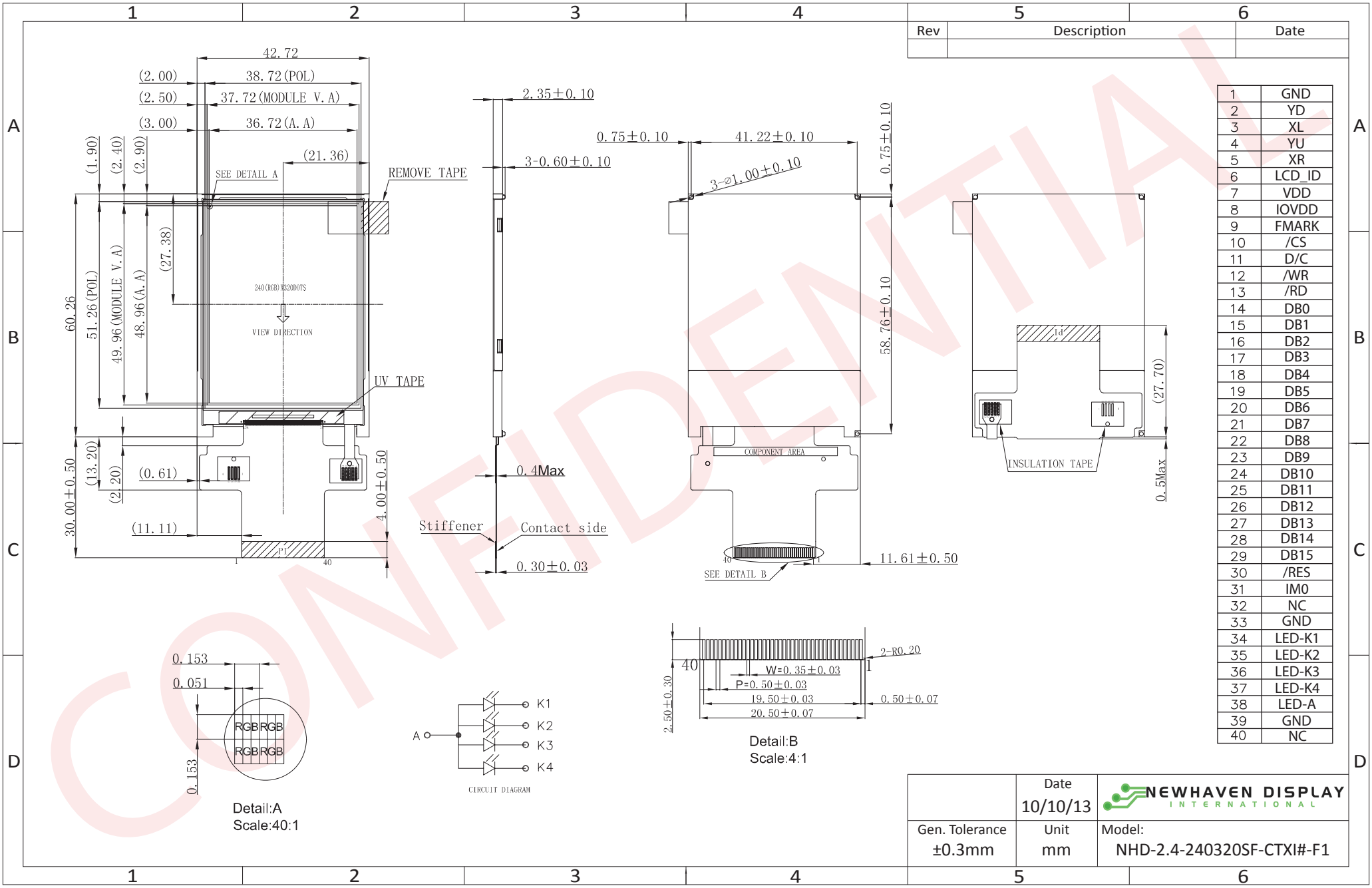

1	GND
2	YD
3	XL
4	YU
5	XR
6	LCD_ID
7	VDD
8	IOVDD
9	FMARK
10	/CS
11	D/C
12	/WR
13	/RD
14	DB0
15	DB1
16	DB2
17	DB3
18	DB4
19	DB5
20	DB6
21	DB7
22	DB8
23	DB9
24	DB10
25	DB11
26	DB12
27	DB13
28	DB14
29	DB15
30	/RES
31	IM0
32	NC
33	GND
34	LED-K1
35	LED-K2
36	LED-K3
37	LED-K4
38	LED-A
39	GND
40	NC

CONFIDENTIAL

The drawing contained herein is the exclusive property of Newhaven Display International, Inc. and shall not be copied, reproduced, and/or disclosed in any format without permission.

Pin Description

Pin No.	Symbol	External Connection	Function Description
1	GND	Power Supply	Ground
2	YD	-	No Connect
3	XL	-	No Connect
4	YU	-	No Connect
5	XR	-	No Connect
6	LCD_ID	MPU/NC	LCD ID pin (No Connect)
7	VDD	Power Supply	Supply Voltage for LCD (2.8V)
8	IOVDD	Power Supply	Supply Voltage for Logic (2.8V)
9	FMARK	MPU/NC	Used when writing RAM data in sync with frame (No Connect)
10	/CS	MPU	Active LOW Chip Select signal (can tie to GND)
11	D/C	MPU	Data / Command selection: '1' = Data ; '0' = Command
12	/WR	MPU	Active LOW Write signal
13	/RD	MPU	Active LOW Read signal
14	DB0	MPU	Bi-directional data bus
15	DB1	MPU	
16	DB2	MPU	8-bit: use DB8-DB15
17	DB3	MPU	16-bit: use DB0-DB15
18	DB4	MPU	
19	DB5	MPU	
20	DB6	MPU	
21	DB7	MPU	
22	DB8	MPU	
23	DB9	MPU	
24	DB10	MPU	
25	DB11	MPU	
26	DB12	MPU	
27	DB13	MPU	
28	DB14	MPU	
29	DB15	MPU	
30	/RES	MPU	Active LOW Reset signal
31	IM0	MPU	IM0=0: 16-bit i80 IM0=1: 8-bit i80
32	NC	-	No Connect
33	GND	Power Supply	Ground
34	LED-K1	Power Supply	Backlight Cathode (Ground)
35	LED-K2	Power Supply	Backlight Cathode (Ground)
36	LED-K3	Power Supply	Backlight Cathode (Ground)
37	LED-K4	Power Supply	Backlight Cathode (Ground)
38	LED-A	Power Supply	Backlight Anode (3.2V)
39	GND	Power Supply	Ground
40	NC	-	No Connect

Recommended LCD connector: 40-pin, 0.5mm pitch FFC connector **Molex P/N**: 54132-4062 or similar

Wiring Diagram

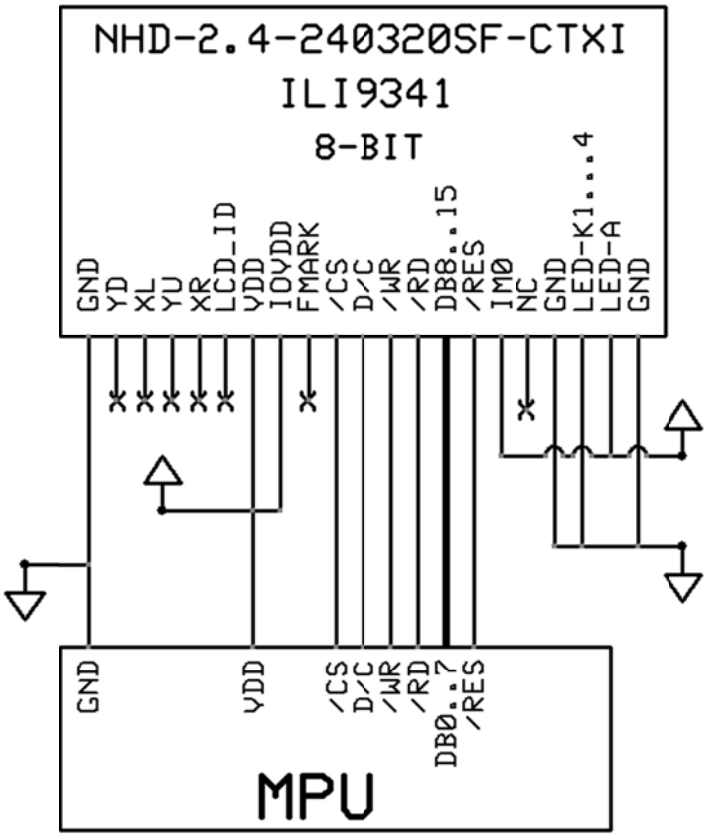

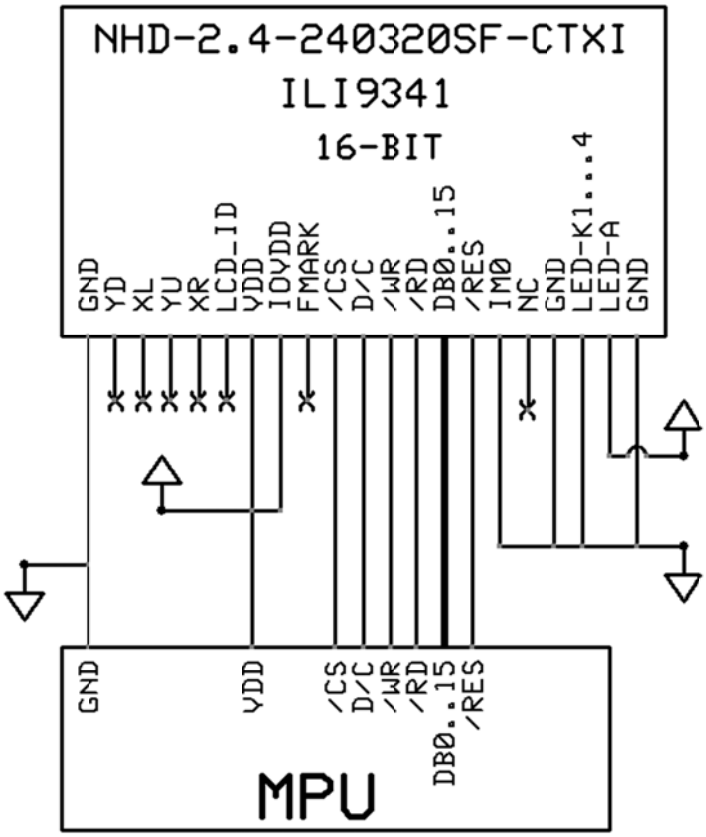

Electrical Characteristics

Item	Symbol	Condition	Min.	Typ.	Max.	Unit
Operating Temperature Range	Top	Absolute Max	-20	-	+70	°C
Storage Temperature Range	Tst	Absolute Max	-30	-	+80	°C
Supply Voltage for LCD	VDD	-	2.5	2.8	3.3	V
Supply Voltage for Logic	IOVDD	-	1.65	2.8	3.3	V
Supply Current	IDD	VDD=2.8V	-	7	9	mA
"H" Level input	Vih	-	0.8*VDD	-	VDD	V
"L" Level input	Vil	-	GND	-	0.2*VDD	V
"H" Level output	Voh	-	0.8*VDD	-	VDD	V
"L" Level output	Vol	-	GND	-	0.2*VDD	V
Backlight Supply Voltage	Vled	-	2.9	3.2	3.4	V
Backlight Supply Current	Iled	Vled=3.2V	-	60	-	mA

Optical Characteristics

Item	Symbol	Condition	Min.	Typ.	Max.	Unit
Viewing Angle – Top	-	Cr ≥ 10	-	60	-	°
Viewing Angle – Bottom	-		-	70	-	°
Viewing Angle – Left	-		-	70	-	°
Viewing Angle – Right	-		-	70	-	°
Contrast Ratio	Cr	-	400	500	-	-
Luminance	Lv	-	-	310	-	cd/m^2
Response Time (rise + fall)	Tr+Tf	-	-	20	30	ms

Viewing angles based on 6:00 gray scale inversion

Controller Information

Built-in ILI9341 controller.
Please download specification at http://www.newhavendisplay.com/app_notes/ILI9341.pdf

Table of Commands

Please download specification at http://www.newhavendisplay.com/app_notes/ILI9341.pdf

Timing Characteristics

Parallel 18/16/9/8-bit Interface Timing Characteristics (8080-II system)

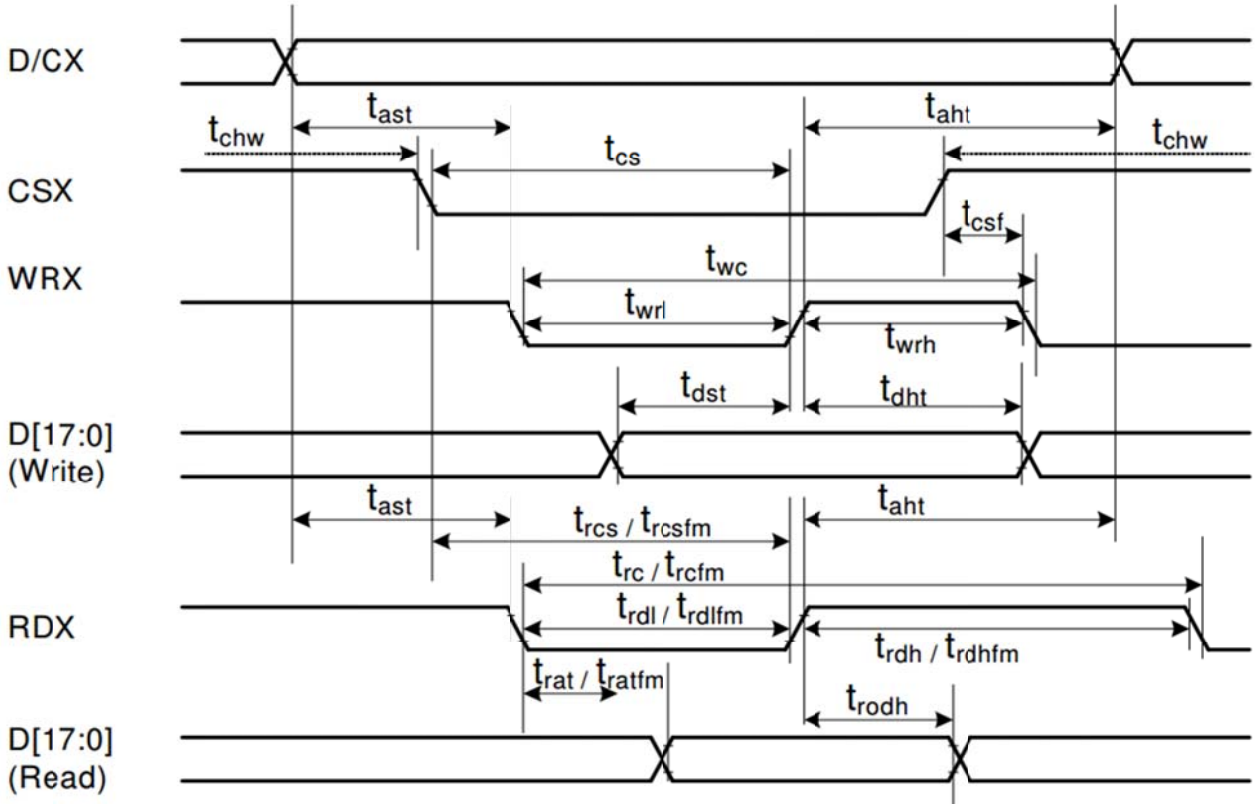

Signal	Symbol	Parameter	min	max	Unit	Description
DCX	tast	Address setup time	0	-	ns	
	taht	Address hold time (Write/Read)	0	-	ns	
CSX	tchw	CSX "H" pulse width	0	-	ns	
	tcs	Chip Select setup time (Write)	15	-	ns	
	trcs	Chip Select setup time (Read ID)	45	-	ns	
	trcsfm	Chip Select setup time (Read FM)	355	-	ns	
	tcsf	Chip Select Wait time (Write/Read)	10	-	ns	
WRX	twc	Write cycle	66	-	ns	
	twrh	Write Control pulse H duration	15	-	ns	
	twrl	Write Control pulse L duration	15	-	ns	
RDX (FM)	trcfm	Read Cycle (FM)	450	-	ns	
	trdhfm	Read Control H duration (FM)	90	-	ns	
	trdlfm	Read Control L duration (FM)	355	-	ns	
RDX (ID)	trc	Read cycle (ID)	160	-	ns	
	trdh	Read Control pulse H duration	90	-	ns	
	trdl	Read Control pulse L duration	45	-	ns	
D[17:0], D[17:10]&D[8:1], D[17:10], D[17:9]	tdst	Write data setup time	10	-	ns	For maximum CL=30pF For minimum CL=8pF
	tdht	Write data hold time	10	-	ns	
	trat	Read access time	-	40	ns	
	tratfm	Read access time	-	340	ns	
	trod	Read output disable time	20	80	ns	

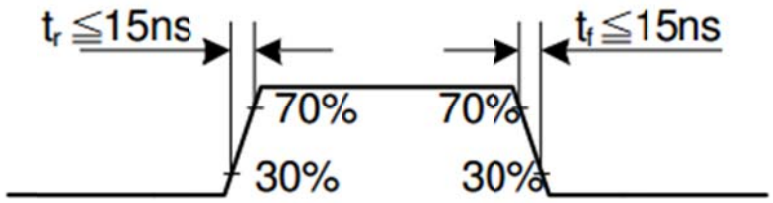

CSX timings :

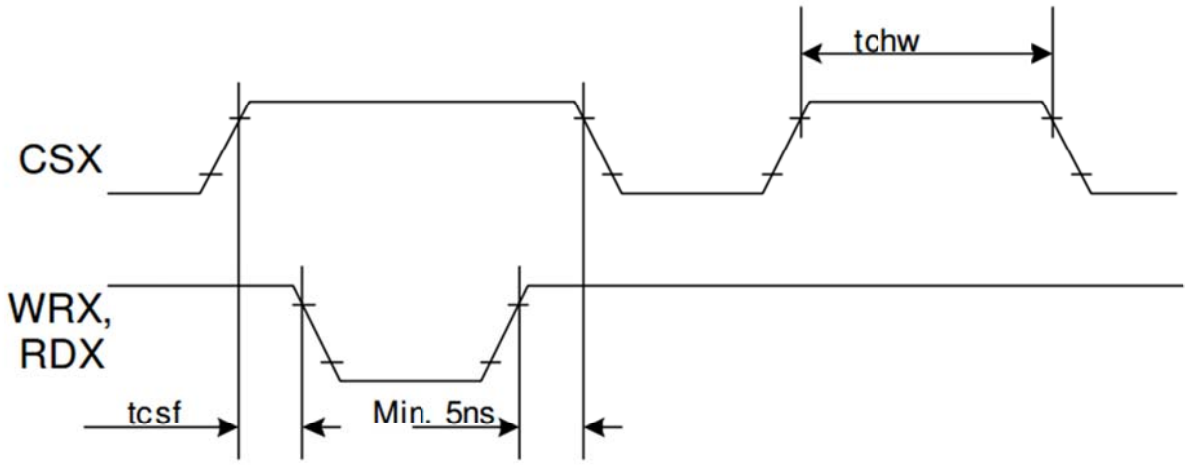

Note: Logic high and low levels are specified as 30% and 70% of VDDI for Input signals.

Write to read or read to write timings:

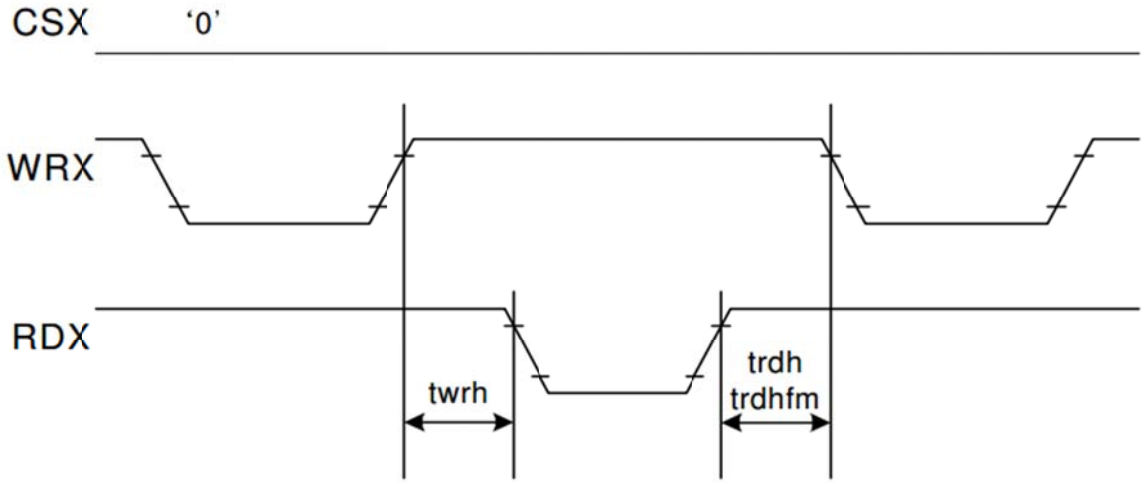

Note: Logic high and low levels are specified as 30% and 70% of VDDI for Input signals.

Example Recommended Initialization Code

```
/*************************************************************/
void TFT_24S_Write_Command(int command)
{
	GPIO_ResetBits(GPIOC, DC);
	GPIO_Write(GPIOB, command);
	GPIO_ResetBits(GPIOC, nWR);
	GPIO_SetBits(GPIOC, nWR);
}
void TFT_24S_Write_Data(int data)
{
	GPIO_SetBits(GPIOC, DC);
	GPIO_Write(GPIOB, data);
	GPIO_ResetBits(GPIOC, nWR);
	GPIO_SetBits(GPIOC, nWR);
}
/*************************************************************/
void init()
{
	GPIO_ResetBits(GPIOC, CS);
	GPIO_SetBits(GPIOC, nRD);
	GPIO_ResetBits(GPIOC, nWR);
	GPIO_WriteBit(GPIOC, RES, Bit_RESET);
	delay(120);
	GPIO_WriteBit(GPIOC, RES, Bit_SET);
	delay(120);

	TFT_24S_Write_Command(0x0028);		//display OFF

	TFT_24S_Write_Command(0x0011);		//exit SLEEP mode
	TFT_24S_Write_Data(0x0000);

	TFT_24S_Write_Command(0x00CB);		//Power Control A
	TFT_24S_Write_Data(0x0039);		//always 0x39
	TFT_24S_Write_Data(0x002C);		//always 0x2C
	TFT_24S_Write_Data(0x0000);		//always 0x00
	TFT_24S_Write_Data(0x0034);		//Vcore = 1.6V
	TFT_24S_Write_Data(0x0002);		//DDVDH = 5.6V

	TFT_24S_Write_Command(0x00CF);		//Power Control B
	TFT_24S_Write_Data(0x0000);		//always 0x00
	TFT_24S_Write_Data(0x0081);		//PCEQ off
	TFT_24S_Write_Data(0x0030);		//ESD protection

	TFT_24S_Write_Command(0x00E8);		//Driver timing control A
	TFT_24S_Write_Data(0x0085);		//non-overlap
	TFT_24S_Write_Data(0x0001);		//EQ timing
	TFT_24S_Write_Data(0x0079);		//Pre-charge timing

	TFT_24S_Write_Command(0x00EA);		//Driver timing control B
	TFT_24S_Write_Data(0x0000);		//Gate driver timing
	TFT_24S_Write_Data(0x0000);		//always 0x00
```

```
    TFT_24S_Write_Command(0x00ED);      //Power-On sequence control
    TFT_24S_Write_Data(0x0064);         //soft start
    TFT_24S_Write_Data(0x0003);         //power on sequence
    TFT_24S_Write_Data(0x0012);         //power on sequence
    TFT_24S_Write_Data(0x0081);         //DDVDH enhance on

    TFT_24S_Write_Command(0x00F7);      //Pump ratio control
    TFT_24S_Write_Data(0x0020);         //DDVDH=2xVCI

    TFT_24S_Write_Command(0x00C0);      //power control 1
    TFT_24S_Write_Data(0x0026);
    TFT_24S_Write_Data(0x0004);         //second parameter for ILI9340 (ignored by ILI9341)

    TFT_24S_Write_Command(0x00C1);      //power control 2
    TFT_24S_Write_Data(0x0011);

    TFT_24S_Write_Command(0x00C5);      //VCOM control 1
    TFT_24S_Write_Data(0x0035);
    TFT_24S_Write_Data(0x003E);

    TFT_24S_Write_Command(0x00C7);      //VCOM control 2
    TFT_24S_Write_Data(0x00BE);

    TFT_24S_Write_Command(0x0036);      //memory access control = BGR
    TFT_24S_Write_Data(0x0088);

    TFT_24S_Write_Command(0x00B1);      //frame rate control
    TFT_24S_Write_Data(0x0000);
    TFT_24S_Write_Data(0x0010);

    TFT_24S_Write_Command(0x00B6);      //display function control
    TFT_24S_Write_Data(0x000A);
    TFT_24S_Write_Data(0x00A2);

    TFT_24S_Write_Command(0x003A);      //pixel format = 16 bit per pixel
    TFT_24S_Write_Data(0x0055);

    TFT_24S_Write_Command(0x00F2);      //3G Gamma control
    TFT_24S_Write_Data(0x0002);         //off

    TFT_24S_Write_Command(0x0026);      //Gamma curve 3
    TFT_24S_Write_Data(0x0001);

    TFT_24S_Write_Command(0x002A);      //column address set
    TFT_24S_Write_Data(0x0000);
    TFT_24S_Write_Data(0x0000);         //start 0x0000
    TFT_24S_Write_Data(0x0000);
    TFT_24S_Write_Data(0x00EF);         //end 0x00EF

    TFT_24S_Write_Command(0x002B);      //page address set
    TFT_24S_Write_Data(0x0000);
    TFT_24S_Write_Data(0x0000);         //start 0x0000
    TFT_24S_Write_Data(0x0001);
    TFT_24S_Write_Data(0x003F);         //end 0x013F
}
```

Quality Information

Test Item	Content of Test	Test Condition	Note
High Temperature Storage	Endurance test applying the high storage temperature for a long time.	+80°C, 96hrs	2
Low Temperature Storage	Endurance test applying the low storage temperature for a long time.	-30°C, 96hrs	1,2
High Temperature Operation	Endurance test applying the electric stress (voltage & current) and the high thermal stress for a long time.	+70°C, 96hrs	2
Low Temperature Operation	Endurance test applying the electric stress (voltage & current) and the low thermal stress for a long time.	-20°C, 96hrs	1,2
High Temperature / Humidity Operation	Endurance test applying the electric stress (voltage & current) and the high thermal with high humidity stress for a long time.	+50°C, 90% RH, 96hrs	1,2
Thermal Shock resistance	Endurance test applying the electric stress (voltage & current) during a cycle of low and high thermal stress.	-10°C,30min -> 25°C,5min -> 60°C,30min = 1 cycle 100 cycles	
Vibration test	Endurance test applying vibration to simulate transportation and use.	10Hz-55Hz-10Hz , 1.5mm amplitude. 60 mins in each of 3 directions X,Y,Z	3
Static electricity test	Endurance test applying electric static discharge.	VS=8KV, RS=330kΩ, CS=150pF Ten times	

Note 1: No condensation to be observed.
Note 2: Conducted after 4 hours of storage at 25°C, 0%RH.
Note 3: Test performed on product itself, not inside a container.

Precautions for using LCDs/LCMs

See Precautions at www.newhavendisplay.com/specs/precautions.pdf

Warranty Information

See Terms & Conditions at http://www.newhavendisplay.com/index.php?main_page=terms