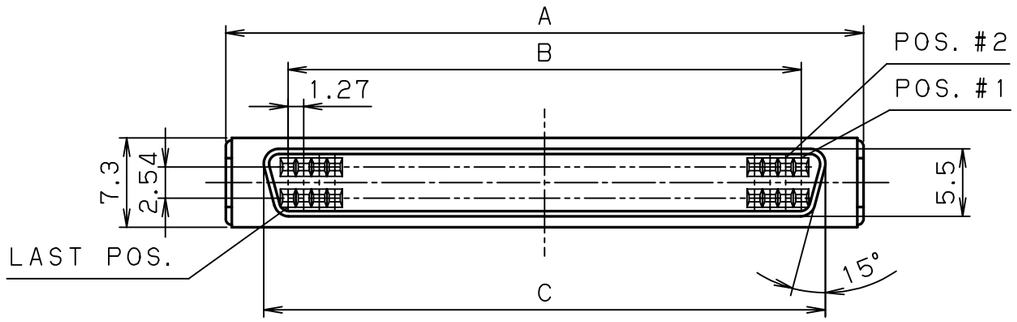

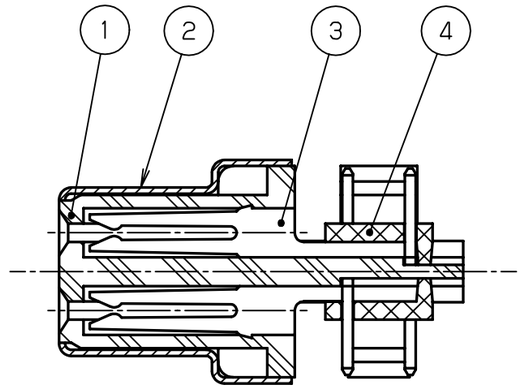

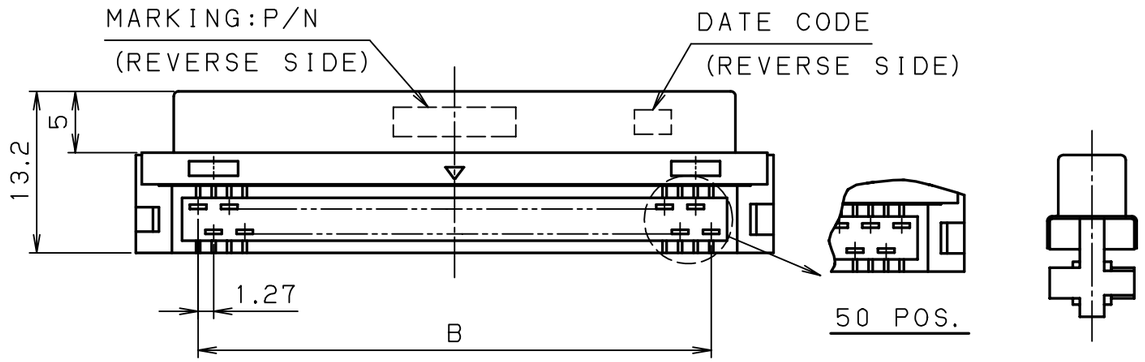

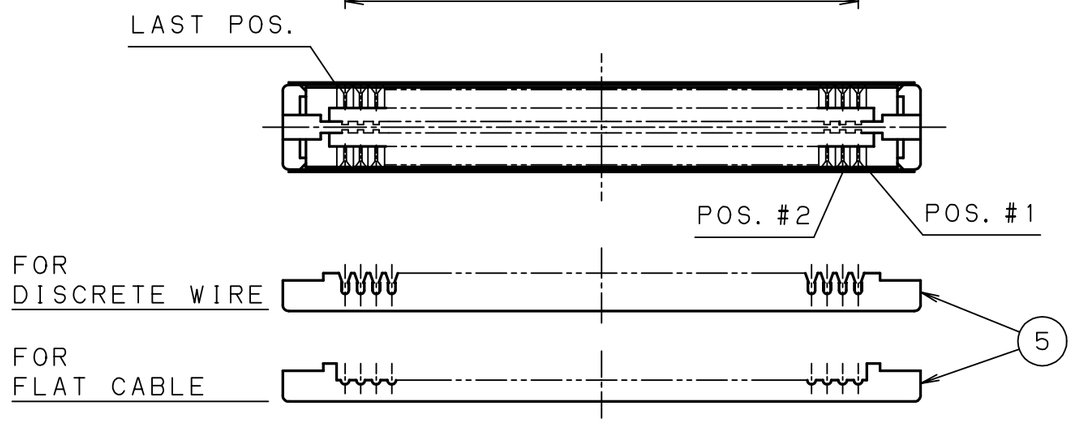

NOTE

1. CONTACT PLATING
   MATING AREA:GOLD 0.76μm MIN
   TERMINAL AREA:GOLD 0.05μm MIN
   UNDERPLATING:NICKEL
2. PART NO.
   PCS-E68FAG1
   - NO. OF POS.
   - CABLE CHARACTERISTICS
3. CABLE CHARACTERISTICS

PART NO.	CABLE CHARACTERISTICS	
PCS-E( )FG1	FOR DISCRETE WIRE O.D. :0.8~1.0mm	#28AWG(7/0.127) #30AWG(1/0.254)
PCS-E( )FAG1	FOR DISCRETE WIRE O.D. :0.5~0.65mm	#28AWG(7/0.127) #30AWG(1/0.254)
PCS-E( )FBG1	FOR DISCRETE WIRE O.D. :0.5~0.65mm	#30AWG(7/0.1)
PCS-E( )FCG1	FOR FLAT CABLE THICKNESS:1mm MAX.	#28AWG(7/0.127) #30AWG(1/0.254)
PCS-E( )FDG1	FOR FLAT CABLE THICKNESS:1mm MAX.	#30AWG(7/0.1)

(96 POS. CONNECTOR IS ONLY FOR DISCRETE WIRE)

PART NO.	NO. OF POS.	A	B	C	MARKING (P/N)
		DIMENSIONS			
PCS-E96F( )G1	96	69.9	1.27x(48-1)=59.69	63.66	HONDA PCS-E96F( )G1
PCS-E80F( )G1	80	59.7	1.27x(40-1)=49.53	53.5	HONDA PCS-E80F( )G1
PCS-E68F( )G1	68	52.1	1.27x(34-1)=41.91	45.88	HONDA PCS-E68F( )G1
PCS-E50F( )G1	50	40.7	1.27x(25-1)=30.48	34.45	HONDA PCS-E50F( )G1
PCS-E36F( )G1	36	31.8	1.27x(18-1)=21.59	25.56	HONDA PCS-E36F( )G1
PCS-E28F( )G1	28	26.7	1.27x(14-1)=16.51	20.48	HONDA PCS-E28F( )G1
PCS-E20F( )G1	20	21.65	1.27x(10-1)=11.43	15.4	HONDA PCS-E20F( )G1

LTR.	DATE	BY	REV. DESCRIPT	No.	PART NAME	MATERIAL	QTY	FINISH	NOTE
3				5	CABLE CAVER	PBT(GF)	2	———	UL94V-0 BLACK
				4	SPACER	PBT(GF)	2	———	UL94V-0 BLACK
3				3	CONTACT	PHOSPHOR BRONZE	NO. OF POS.	NOTE#1	———
2				2	SHELL	STEEL	1	Ni PLATING	———
1				1	INSULATOR	PBT(GF)	1	———	UL94V-0 BLACK

DATE	SCALE	UNIT	3RD. A. P
MAR.01.2002	2 / 1	mm(INCH)	
APP. DATE&REV.			

DR.	DE.	CHK.	CHK.	APP.
K.SUKESADA	K.SUKESADA	K.YOTSUTANI	K.HOMMA	K.SATO

HONDA TSUSHIN KOGYO CO., LTD.

NAME: PCS-E TYPE FEMALE CONNECTOR

PART NO.: PCS-E( )F( )G1 REV.

ID= PCS-E@F@G1 E0