THIS DRAWING IS UNPUBLISHED. RELEASED FOR PUBLICATION -.-
© COPYRIGHT - BY TYCO ELECTRONICS CORPORATION. ALL INTERNATIONAL RIGHTS RESERVED.

LOC	DIST
GP	00

REVISIONS

P	LTR	DESCRIPTION	DATE	DWN	APVD
	C	REVISED PER ECO-08-004952	9JUN2008	ZMR	SLB

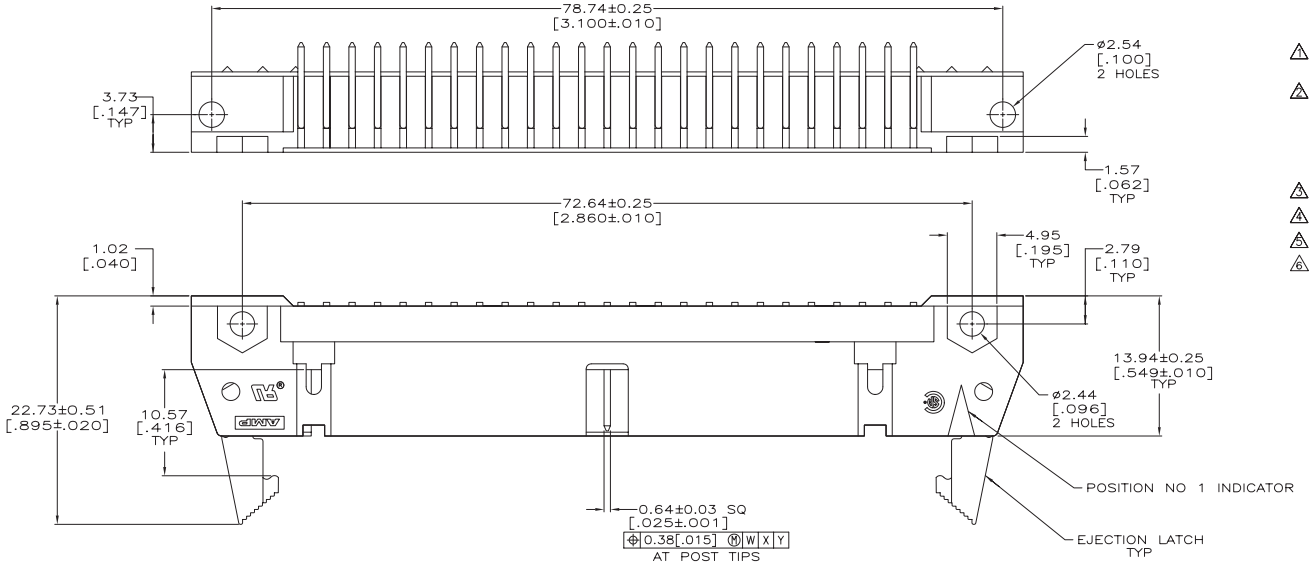

1. HOUSING AND LATCHES: PCT, UL94V-0 RATED, COLOR RED.
   POSTS: BRASS.
2. POSTS: GOLD FLASH OVER PALLADIUM-NICKEL PLATE, 0.76µm[.000030] MIN TOTAL ON THE LOCALIZED PLATE AREA, 2.54µm[.000100] MIN TIN PLATE ON THE SOLDER-TAIL, 1.27µm[.000050] MIN NICKEL UNDERPLATE ON THE ENTIRE POST.
   -OR-
   0.76µm[.000030] MIN GOLD PLATE ON THE LOCALIZED PLATE AREA, 2.54µm[.000100] MIN TIN PLATE ON THE SOLDER-TAIL, 1.27µm[.000050] MIN NICKEL UNDERPLATE ON THE ENTIRE POST.
3. DISTANCE REQUIRED BY LATCHES IN OPEN POSITION.
4. RECOMMENDED PRINTED CIRCUIT BOARD THICKNESS 1.57 [.062].
5. RECOMMENDED PAD THICKNESS 0.25 [.010].
6. DATUMS -M- & -N- TO BE ESTABLISHED BY CUSTOMER.

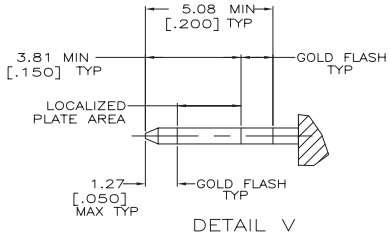

DETAIL V
SCALE 10:1

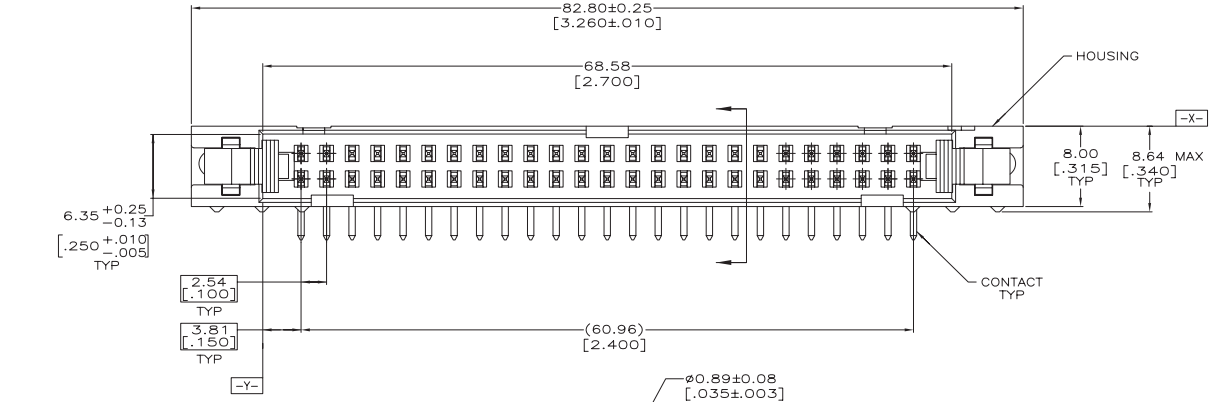

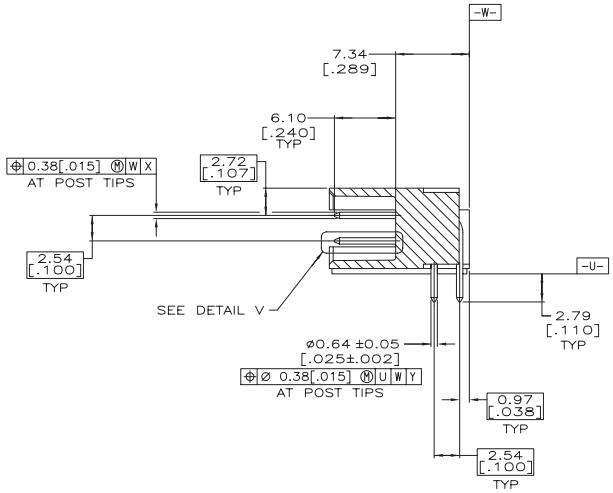

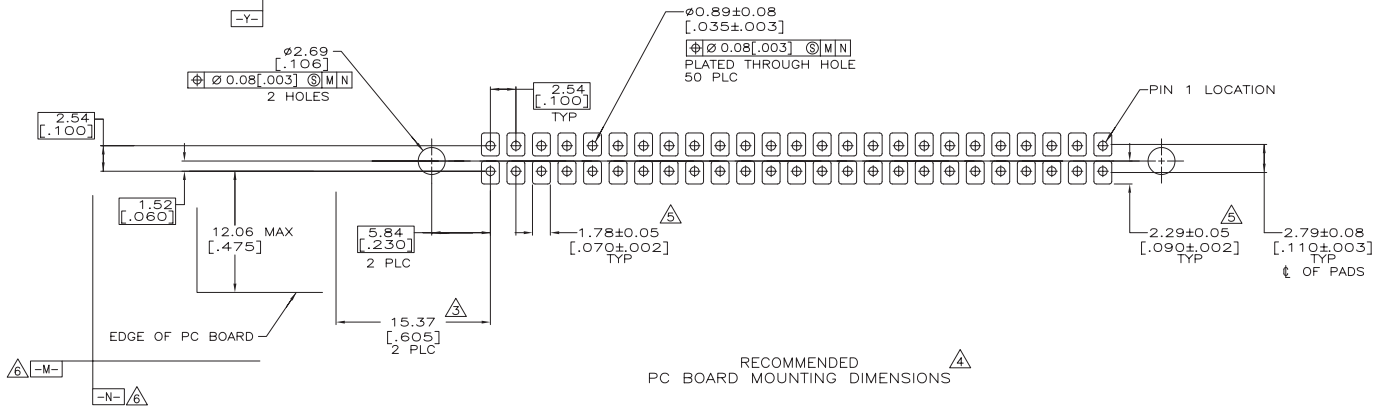

RECOMMENDED
PC BOARD MOUNTING DIMENSIONS

50	1-5111969-0
NO OF POSN	PART NUMBER

THIS DRAWING IS A CONTROLLED DOCUMENT.

DIMENSIONS: mm [INCHES]

TOLERANCES UNLESS OTHERWISE SPECIFIED:
0 PLC ± -
1 PLC ± -
2 PLC ± 0.13 [.005]
3 PLC ± -
4 PLC ± -
ANGLES ± -

MATERIAL 1
FINISH 2

DWN L. VARELA - DOCKS 01-06-05
CHK S. BOLASH 01-06-05
APVD M. WALMSLEY 01-06-05
PRODUCT SPEC 108-40018
APPLICATION SPEC -
WEIGHT -

Tyco Electronics
Tyco Electronics Corporation
Harrisburg, PA 17105-3608

NAME HEADER ASSEMBLY, HIGH-TEMP, UNIVERSAL HEADER, AMP-LATCH
-

SIZE	CAGE CODE	DRAWING NO	RESTRICTED TO
A1	00779	C-5111969	-

CUSTOMER DRAWING | SCALE 4:1 | SHEET 1 OF 1 | REV C

4805 (1/08)