MICRO SWITCH
FREEPORT ILLINOIS, U.S.A
A DIVISION OF HONEYWELL
FED. MFG. CODE 91929

SWITCH – PUSHBUTTON

CATALOG LISTING
15PB31

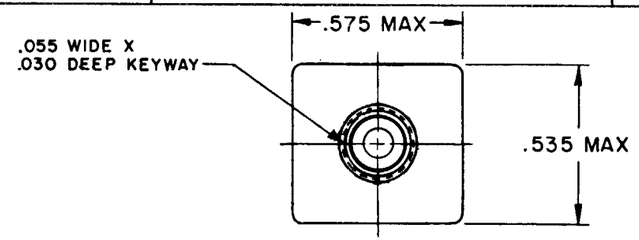

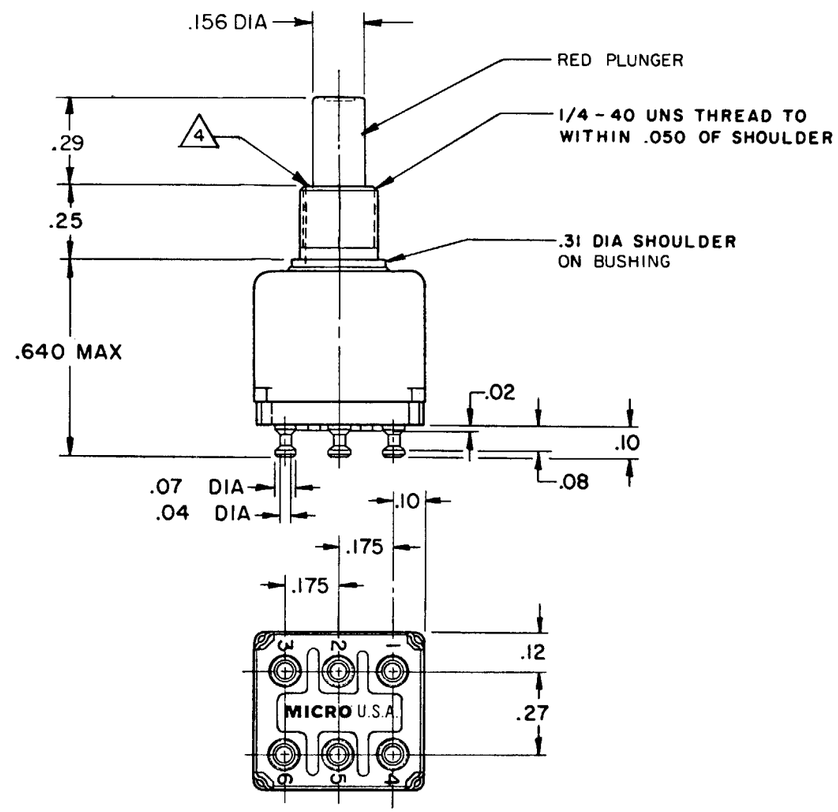

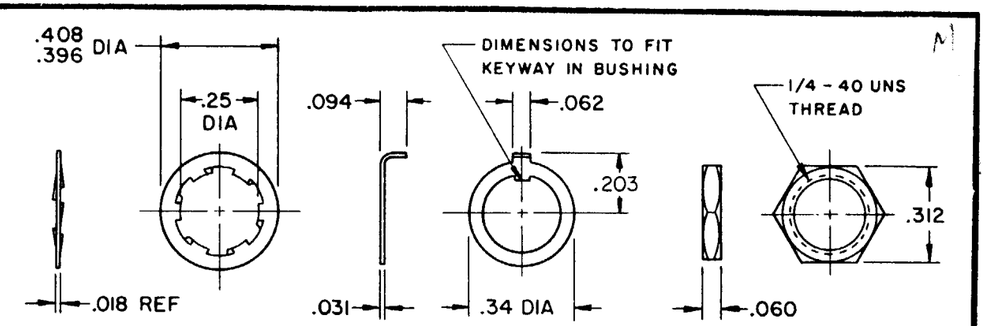

PLUNGER RELEASED	PLUNGER DEPRESSED
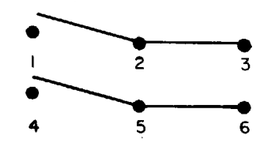	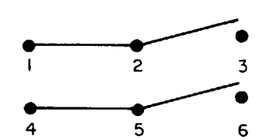

NOTES:
1. FURNISHED UNASSEMBLED
2 - TERMINALS ARE PLATED FOR SOLDERING
3. MATTE NICKEL FINISH
4. BRIGHT NICKEL PLATE FINISH
5 - RECOMMENDED FOR MANUAL OPERATION ONLY
6 - DATE CODE, CAT. LISTING & TERMINAL IDENT IS MARKED ON SIDE OF SWITCH

THIS DRAWING COVERS A PROPRIETARY ITEM AND IS THE PROPERTY OF MICRO SWITCH, A DIVISION OF HONEYWELL. THIS DRAWING IS NOT TO BE COPIED OR USED WITHOUT THE APPROVAL OF MICRO SWITCH.

THIRD ANGLE PROJECTION

CHARACTERISTICS	ELECTRICAL DATA	SCALE 2 TO 1
OPERATING FORCE - - - 20 OZ APPROX	CONTACT ARRANGEMENT D P D T (MOMENTARY)	DO NOT SCALE PRINT
TOTAL TRAVEL - - - - - - .150 APPROX	115 VAC OR 30 VDC RESISTIVE - - - - - - - - 5 AMP INDUCTIVE - - - - - - - - 2 AMP LAMP - - - - - - - - - - 1 AMP AT 65,000 FT ALTITUDE	TOLERANCES APPLY TO DESIGN UNITS. CONVERSIONS ARE ONLY FOR REFERENCE. UNLESS NOTED, TOLERANCES ARE ±
	CODE L117 5A-125 VAC	DESIGN UNITS: SI METRIC ☐ US CUSTOMARY ☒
		WEIGHT .016 LB MAX

	DIM. mm	TOL. mm/in	DIM. in	TOL. mm/in
NO PLACES	X	1/.04		
ONE PLACE	X.X	0.4/.016	X.X	0.8/.03
TWO PLACES	X.XX	0.15/.006	X.XX	0.38/.015
THREE PLACES			X.XXX	0.13/.005
ANGLES				

REVISIONS		
A	C037379	K P K 16 JUL 76
B	C059236	J A P 27 MAR 86
C	C060532	TSK 18 NOV 86
D	C061252	J A P 12 MAR 87
E	C062939	TSK 24 FEB 88
F	C067868	SAV 10 JUL 90
G	CO 73286	DAW 22 SEP 92

M 15PB31 — DRAWING NUMBER
ISSUE X 2 8 / X 3 3 / X X / X 3 3
RELEASE NO. PR-5302
REPLACES
CHECK
DRAWN R E R 20 OCT 75
CHECK DAW 21 OCT 75
CHECK 75
FO-52848-A