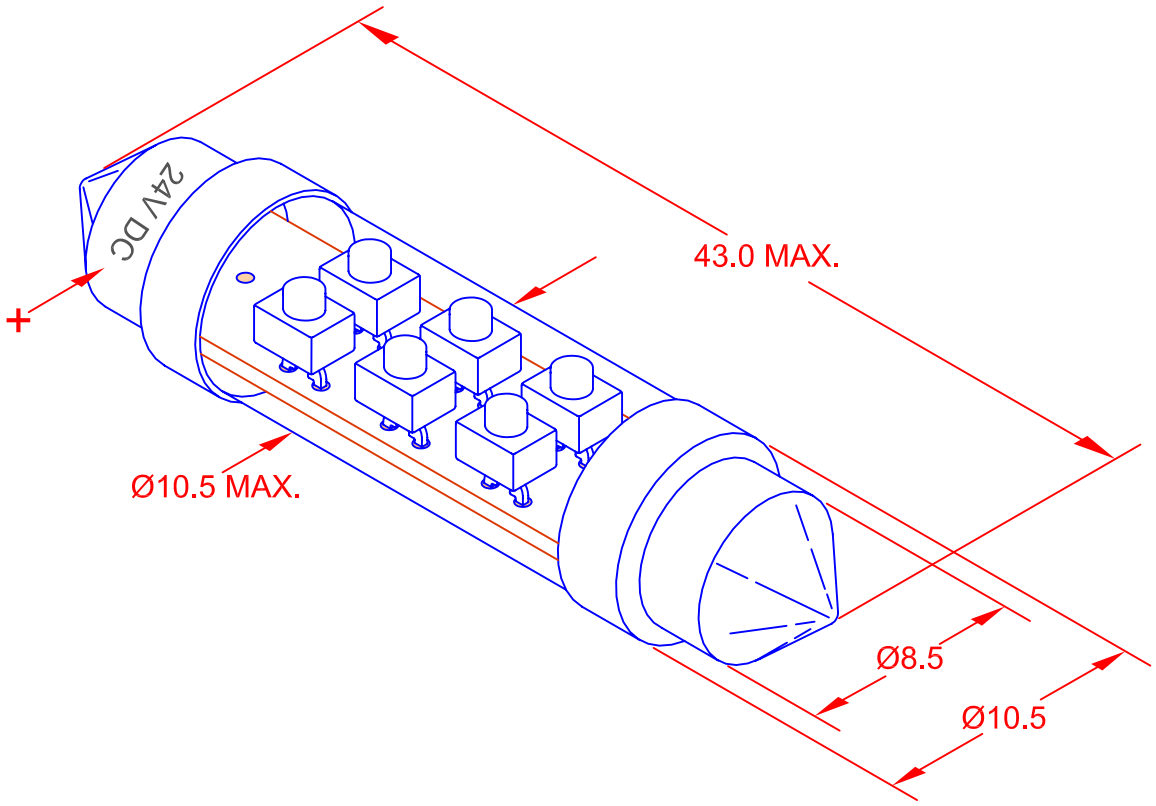


NOTES:
1. LED includes integrated diode for reverse voltage protection.
2. LED includes integrated resistor for current limiting.

**TYPICAL ELECTRICAL & OPTICAL OPERATING CHARACTERISTICS**
**(Ta = 25 degree C)**

| PART NUMBER | EMITTING COLOR | AMPERAGE mA | VOLTAGE Vdc | LUMENS | COLOR COORDINATES |
|---|---|---|---|---|---|
| LE-0603-04R | RED | 13mA | 24.0 | 2.00 | 630nm |
| LE-0603-04Y | YELLOW | 12mA | 24.0 | 2.00 | 595nm |
| LE-0603-04G | GREEN | 6mA | 24.0 | 9.00 | 525nm |
| LE-0603-04B | BLUE | 11mA | 24.0 | 2.00 | 470nm |
| LE-0603-04W | WHITE | 9mA | 24.0 | 10.00 | x = 0.29 y = 0.28 |

| REV. NO. | DESCRIPTION/ECO NUMBER | APPV'D DATE |
|---|---|---|
| H | CHANGE AMPERATE RATINGS | 12/8/10 |
| G | CHANGE DIA. TO 10.5 MAX. | 11/10/09 |
| F | CHANGE mA FROM 20 TO 12 | 10/29/09 |
| E | CHANGE MOL FROM 42.0 MAX. TO 43.0 MAX. | 1/22/09 |
| D | CHANGE CHARTS ADD NOTES | 8/25/08 |
| C | ADD ELECT & OPTICAL INFO | 3/9/07 |
| B | ADD + MARKING-24V DC | 10/3/06 |
| A | CHNG. 04B MSCP TO .14 | 7/24/06 |
| | ENGR. RELEASE & CANCEL PL-0603-04-1 TO -5 | 7/5/06 |

METRIC
THIRD ANGLE PROJECTION

DIMENSIONS ARE IN MILLIMETERS
TOLERANCE UNLESS OTHERWISE SPECIFIED
1 PL +/- 0.2
2 PL +/- 0
ANGLE +/- 0

JKL COMPONENTS CORPORATION

TITLE: LED FESTOON LAMP

| DRAWN BY | APPV'D BY | DATE | SIZE | FSCM NO. | DRAWING NO. |
|---|---|---|---|---|---|
| L. WENGSTROM | L.R. | 12/8/10 | A | 55335 | LE-0603-04 |

- CAD DRAWING -
MANUAL REVISIONS NOT PERMITTED

| SCALE | RELEASED DATE | REVISION DATE | REV. NO. | SHEET |
|---|---|---|---|---|
| NONE | 7/5/06 | 12/8/10 | H | 1 OF 1 |