REVISIONS					
	C1	ECO-0077-03	01-Oct-03	JG	JG
	D	ECO-0110-03	06-Nov-03	JG	JG
	E	ECO-0048-04	23-Mar-04	JG	JG

⚠ CABLE ASSEMBLY SHALL BE WIRED PER WIRING DIAGRAM.

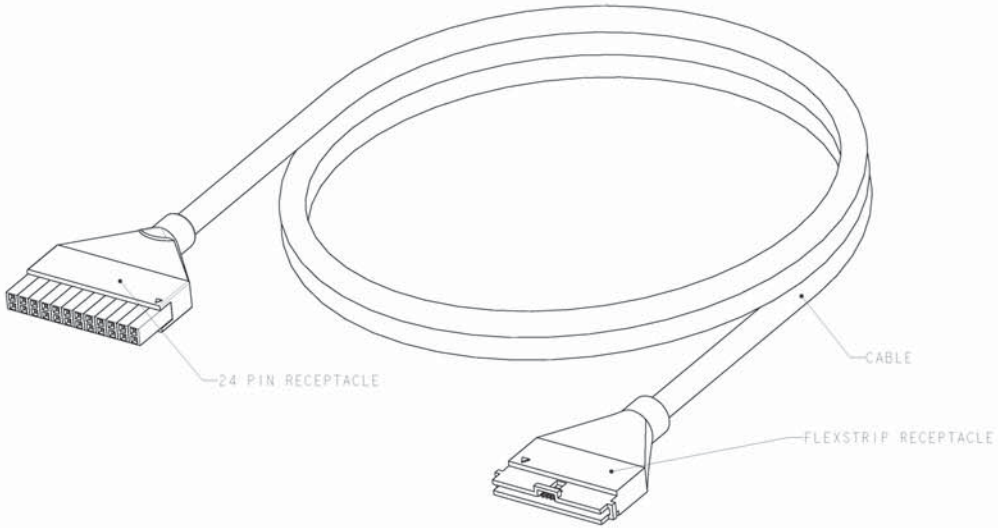

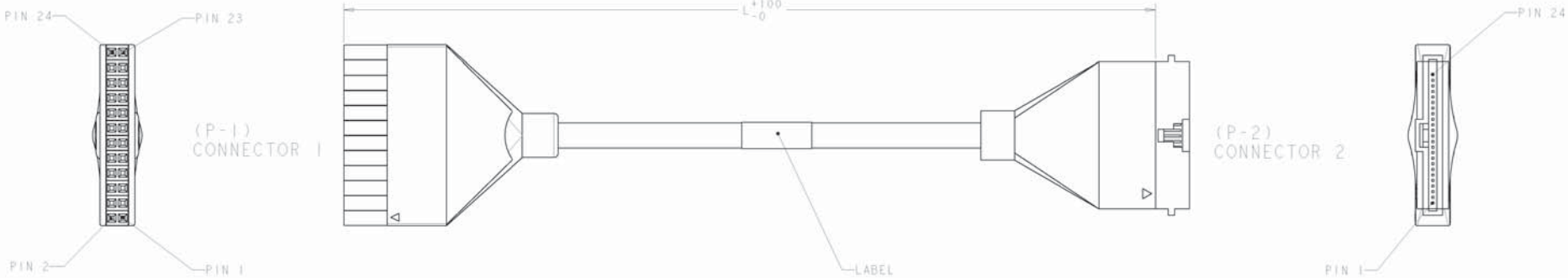

WIRING DIAGRAM ⚠

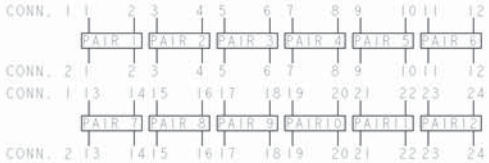

METER	L	PART NO.
15	15000.00 [590.55]	1-1435334-5
10	10000.00 [393.70]	1-1435334-0
5	5000.0 [196.85]	1435334-5
4	4000.0 [157.48]	1435334-4
3	3000.0 [118.11]	1435334-3
2	2000.0 [78.74]	1435334-2
1	1000.0 [39.37]	143534-1

DRAWN: J. PITTS 22JUL02
CHK: L. SMITH 22JUL02
APPD: P. BERE 22JUL02

tyco Electronics — Tyco Electronics AMP España S.A. Barcelona, Spain

NAME: AMPTRAC I/O CABLE TO FLEXSTRIP LSZH

DIMENSIONS: MM [INCHES]
TOLERANCES UNLESS OTHERWISE SPECIFIED: 0 PLC ±- 1 PLC ±- 2 PLC ±- 3 PLC ±- 4 PLC ±-
PRODUCT SPEC -
APPLICATION SPEC -
WEIGHT -
MATERIAL -
FINISH -

SIZE A1 | CAGE CODE 00779 | DRAWING NO C-1435334 | RESTRICTED TO -

CUSTOMER DRAWING | SCALE NTS | SHEET 1 OF 1 | REV E

Pro/ENGINEER DRAWING