MICRO SWITCH
FREEPORT, ILLINOIS, U.S.A.
A DIVISION OF HONEYWELL

FED. MFG. CODE 91929

PACKET

CATALOG LISTING
6 PA SERIES
CHART 2

THIS DRAWING COVERS A PROPRIETARY ITEM AND IS THE PROPERTY OF MICRO SWITCH, A DIVISION OF MINNEAPOLIS-HONEYWELL REGULATOR CO. THIS DRAWING IS NOT TO BE COPIED OR USED WITHOUT THE APPROVAL OF MICRO SWITCH.

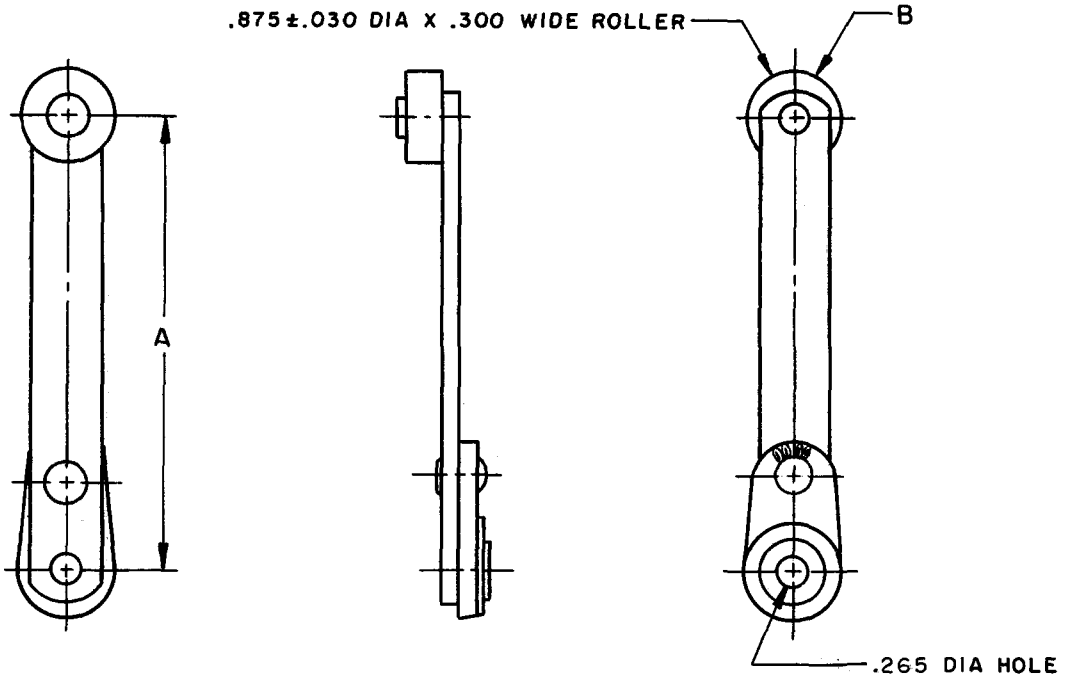

CAT. LISTING	A	B
(D)	1.780	NYLON
6PA104	2.000	NYLON
6PA105	2.500	NYLON
6PA106	3.000	NYLON
6PA107	3.500	NYLON
6PA108	4.000	NYLON
6PA109	4.500	NYLON
6PA111	1.780	STEEL
6PA112	2.000	STEEL
6PA113	2.500	STEEL
6PA114	3.000	STEEL
6PA115	3.500	STEEL
6PA116	4.000	STEEL
6PA117	4.500	STEEL

UNLESS OTHERWISE SPECIFIED
TOLERANCES ARE:

ONE PLACE	(.0)	±.030
TWO PLACE	(.00)	±.015
THREE PLACE	(.000)	±.005
ANGLES		±

RAW MATERIAL — COMMERCIAL STANDARD

DIMENSIONS ARE IN INCHES AND ARE TO BE MET BEFORE PROTECTIVE COATINGS ARE APPLIED

CATALOG LISTING
M 6 PA SERIES CHART 2
PAGE 1 OF 1

ISSUE 5

REPLACES
RELEASE NO. SR 11974

REVISIONS

A	C026508	M B S 24 OCT 69	CHECK
B	PR11219	S L B 27 MAY 82	14 SEP 65
C	C077459	KEU 13 OCT 94	BRJ
D	CO-95887	C S L 7 MAR 00	CHECK

14 SEP 65
LSD
CHECK
65 SEP 13
DRAWN
O M W

FORMTEK
FO-50378-003