THIS DRAWING IS UNPUBLISHED. RELEASED FOR PUBLICATION -,- .
© COPYRIGHT - By - ALL RIGHTS RESERVED.

LOC	DIST
G	14

REVISIONS

P	LTR	DESCRIPTION	DATE	DWN	APVD
	Y1	REVISED PER ECO-11-004917	11MAR11	RK	HMR

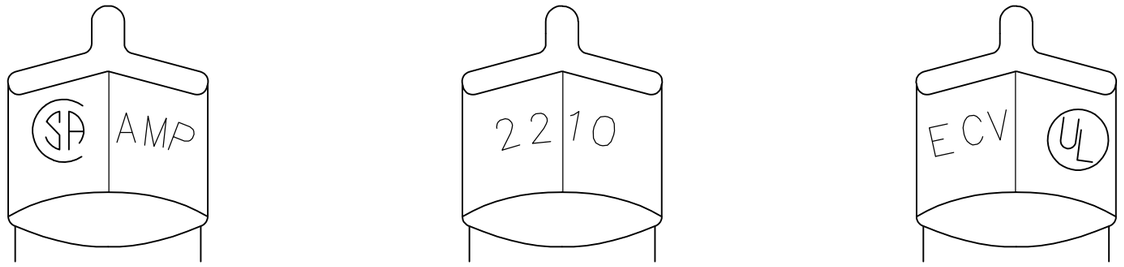

STAMPING DETAIL

1. FOR 9.14 [.360] MAX WIRE INSULATION DIA
2. MATERIAL: BODY; COPPER PER ASTM B152
   INSULATION; PVC
   COLOR; PURPLE
3. FINISH: BODY; TIN PL. PER ASTM B545

AMP WIRE RANGE	Listed	LR7189 Certified
22-10 AWG SOLID OR STRANDED	22-10 AWG SOLID OR STRANDED	22-10 AWG SOLID OR STRANDED

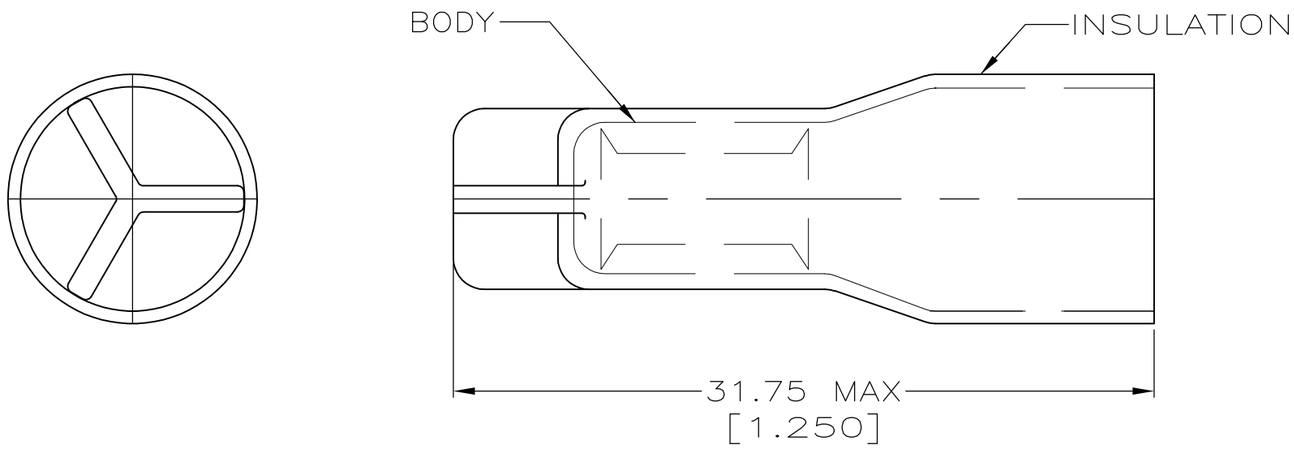

QTY	DESCRIPTION	PART NO
100	LOOSE PC,BOX	8-321519-1
1500	TAPE MOUNTED	2-321519-2
-	LOOSE PIECE	321519

AMP INCORPORATED
CUSTOMER SERVICE SYSTEMS

FOR ADDITIONAL PRODUCT INFORMATION OR COPIES OF DRAWINGS AND TECHNICAL DOCUMENTS	PRODUCT INFORMATION CENTER 1-800-522-6752
FOR APPLICATION TOOLING INFORMATION	TOOLING ASSISTANCE CENTER 1-800-722-1111
FOR ORDER ENTRY	1-800-526-5142

THIS DRAWING IS A CONTROLLED DOCUMENT FOR AMP INCORPORATED. IT IS SUBJECT TO CHANGE AND THE CONTROLLING ENGINEERING ORGANIZATION SHOULD BE CONTACTED FOR THE LATEST REVISION.

MAX RECOMMENDED OPERATING TEMPERATURE: 105° C MAX

VOLTAGE RATING:
600V MAX (BUILDING & WIRING)
1000V MAX (FIXTURES & SIGNS)

CIRCULAR MIL AREA:
1.65-6.59mm² [3248-13000]
SOLID OR STRANDED

THIS DRAWING IS A CONTROLLED DOCUMENT.

DIMENSIONS: INCHES

TOLERANCES UNLESS OTHERWISE SPECIFIED:

0 PLC	± -
1 PLC	± -
2 PLC	± 0.20[.008]
3 PLC	± -
4 PLC	± -
ANGLES	± -

MATERIAL 2

FINISH 3

DWN	G KRUPER	1/93
CHK	R HERSEY	1/93
APVD	M ELLIS	1/93
PRODUCT SPEC	—	
APPLICATION SPEC	—	
WEIGHT	—	

TE Connectivity

NAME
SPLICE, WIRE, CLOSED END
-
-

SIZE	CAGE CODE	DRAWING NO	RESTRICTED TO
A3	00779	C-321519	—

CUSTOMER DRAWING

SCALE	SHEET	REV
4:1	1 OF 1	Y1