THIS DRAWING IS UNPUBLISHED. RELEASED FOR PUBLICATION JUL .1996.
© COPYRIGHT 1996 BY TYCO ELECTRONICS CORPORATION. ALL RIGHTS RESERVED.

LOC	DIST
J	—

REVISIONS 変更

P	LTR	DESCRIPTION	DATE	DWN	APVD
	A	REVISED FJB0-0366-03	15JAN04	J.T	H.M

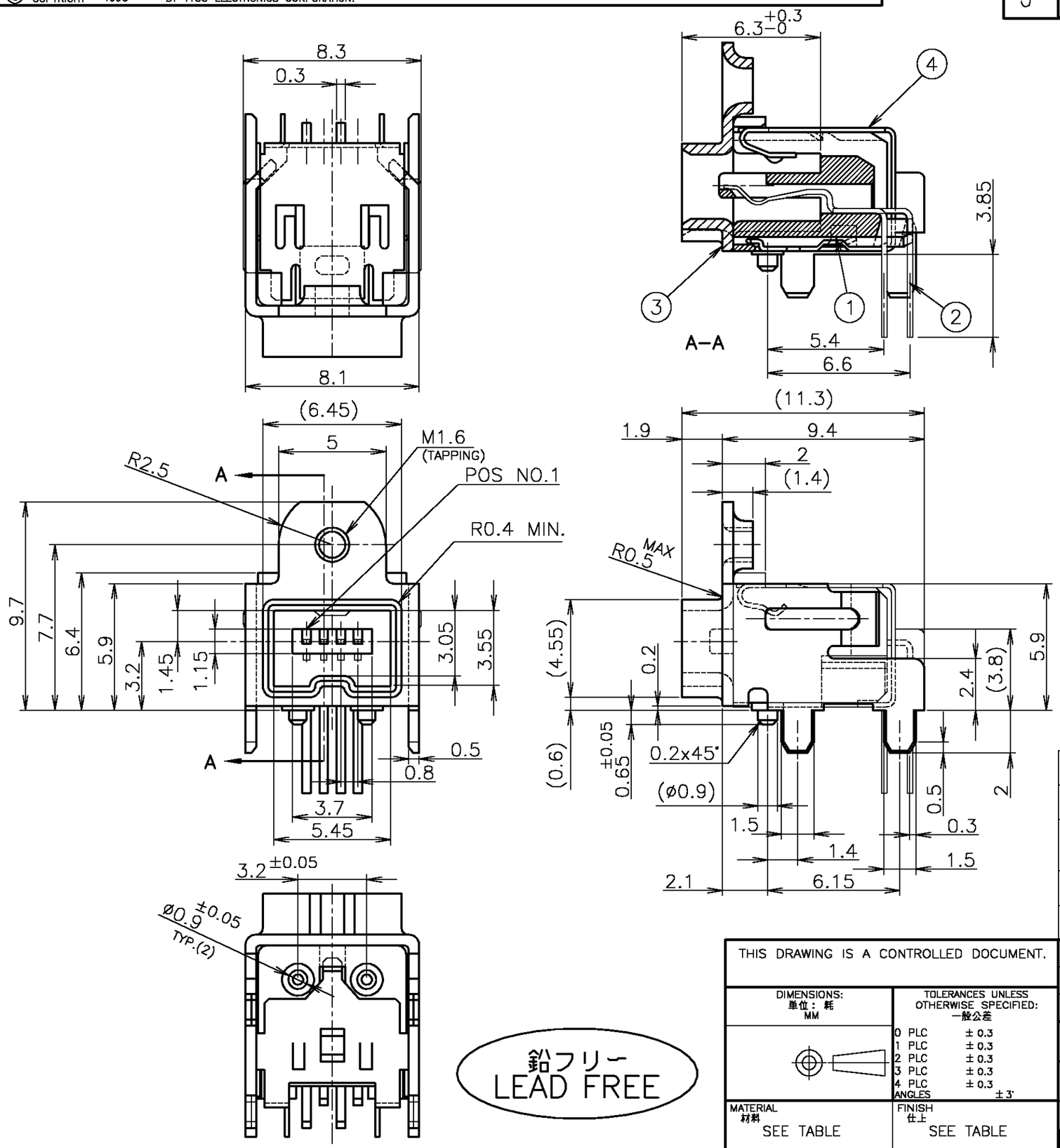

−1: 本図
AS SHOWN

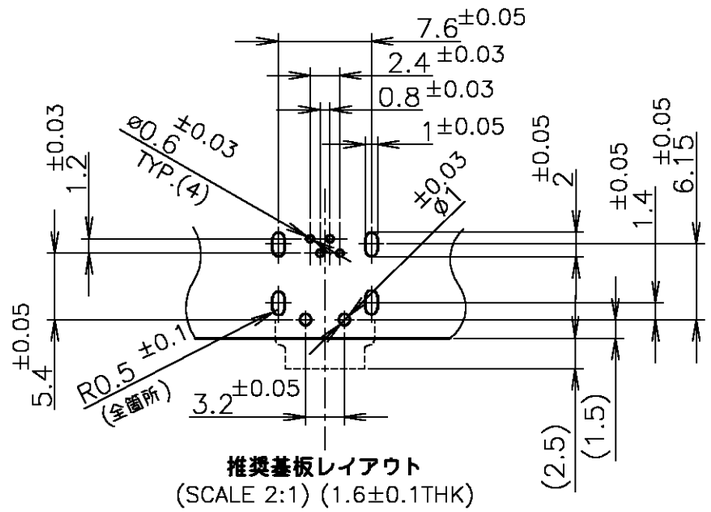

推奨基板レイアウト
(SCALE 2:1) (1.6±0.1THK)

1. M1.6 ビス締め部推奨トルク；19.6N・cm(2kgf・cm)
1. M1.6 TAP; 19.6N・cm(2kgf・cm) MAX.

NO.	NAME	MATERIAL	FINISH
4	BACK SHELL	りん青銅 PHOS-BRO	TIN: 0.002mm
3	FRONT SHELL	黄銅 BRASS	TIN: 0.002mm
2	CONTACT	銅合金 COPPER ALLOY	Ni UNDER PLATING: 0.00127mm MIN. CONTACT AREA: Au 0.0003mm MIN. SOLDERING AREA: TIN 0.002mm
1	HOUSING	6T ナイロン (UL94V-0)	BLACK

鉛フリー
LEAD FREE

THIS DRAWING IS A CONTROLLED DOCUMENT.

DIMENSIONS: 単位：耗 MM

TOLERANCES UNLESS OTHERWISE SPECIFIED: 一般公差

0 PLC	± 0.3
1 PLC	± 0.3
2 PLC	± 0.3
3 PLC	± 0.3
4 PLC	± 0.3
ANGLES	± 3°

MATERIAL 材料: SEE TABLE
FINISH 仕上: SEE TABLE

DWN H.HOSHINO 14APR98
CHK J.TANIGAWA 14APR98
APVD S.KUBOUCHI 14APR98
PRODUCT SPEC 製品規格
APPLICATION SPEC 取付適用規格
WEIGHT

tyco Electronics — Tyco Electronics AMP K.K. Kawasaki.Japan

NAME 名称: REC HEADER 4POS DIP TYPE IEEE 1394 AV CONNECTOR (パネル取付タイプ)

SIZE	CAGE CODE	DRAWING NO 番号	RESTRICTED TO
A3	00779	C-1123843	—

CUSTOMER DRAWING

SCALE 尺度 5:1 SHEET 1 OF 1 REV A

OBSOLETE
NOT the LATEST REVISION