DATE	DESCRIPTION	REV.

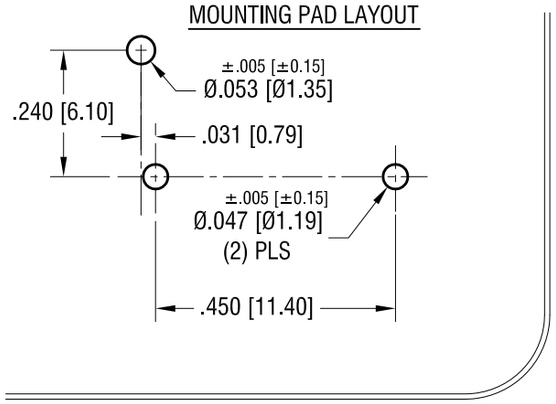

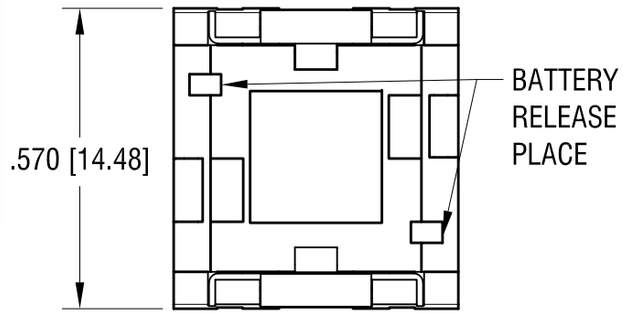

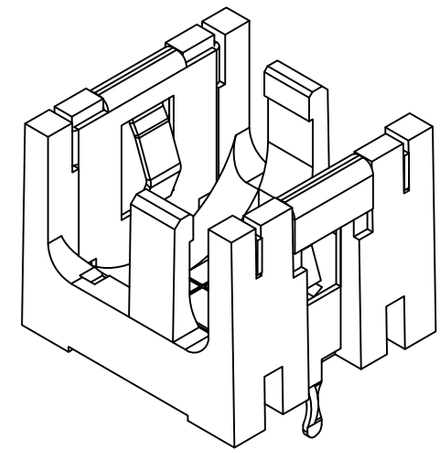

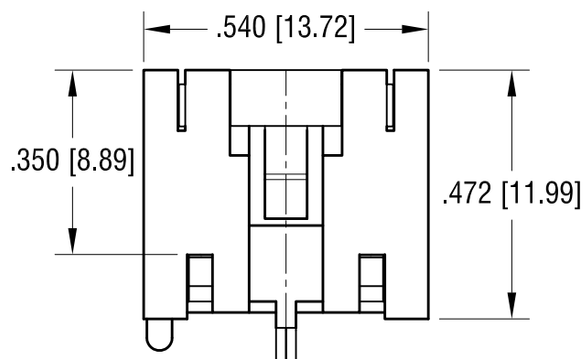

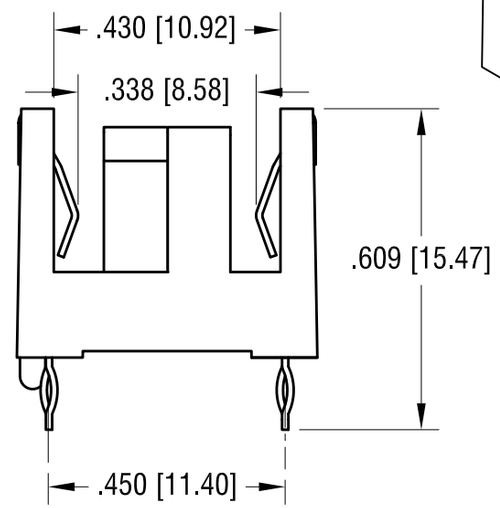

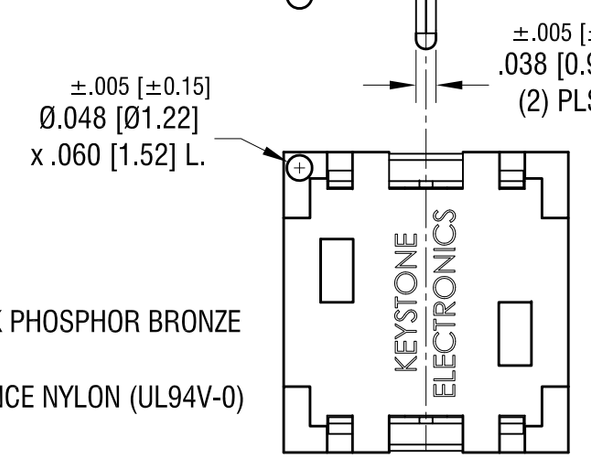

NOTE:
1. CONTACT: MAT'L- .012 [0.30]TH'K PHOSPHOR BRONZE
FINISH- TIN PLATE
2. HOUSING: MAT'L- HEAT RESISTANCE NYLON (UL94V-0)

THIS DOCUMENT IS THE PROPERTY OF KEYSTONE ELECTRONICS CORP. AND SHALL NOT BE REPRODUCED, DISTRIBUTED OR USED AS A BASIS FOR MANUFACTURE WITHOUT PRIOR WRITTEN PERMISSION FROM KEYSTONE ELECTRONICS CORP.

KEYSTONE ELECTRONICS CORP.
www.keyelco.com • ASTORIA, N.Y. 11105-2017 • Tel (718) 956-8900

PART NAME: 1/3 N HORIZONTAL PC HOLDER			
MATERIAL: AS NOTED			
FINISH: AS NOTED	DRN BY: NT	DATE: 4.27.10	
	APP'D: LN	SCALE: 3X	
TOLERANCES INCH [MM] DECIMAL ± .010 [± 0.25] ANGULAR ± 1° UNLESS OTHERWISE SPECIFIED	CODE: C	DWG NO.: 503	