THIS DRAWING IS UNPUBLISHED. RELEASED FOR PUBLICATION -,- .
© COPYRIGHT - By - ALL RIGHTS RESERVED.

LOC	DIST
AF	50

REVISIONS

P	LTR	DESCRIPTION	DATE	DWN	APVD
	L	REVISED PER ECR-12-013459	28NOV2012	KH	PD

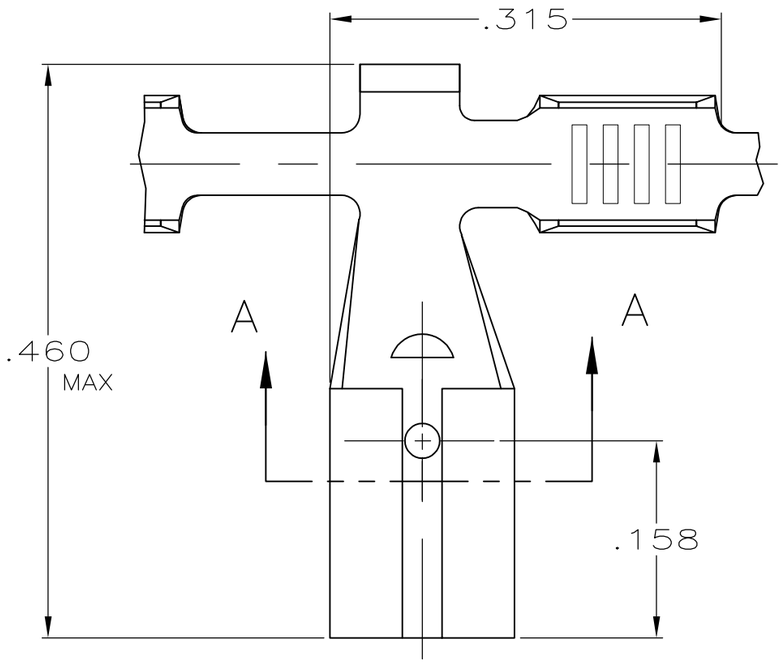

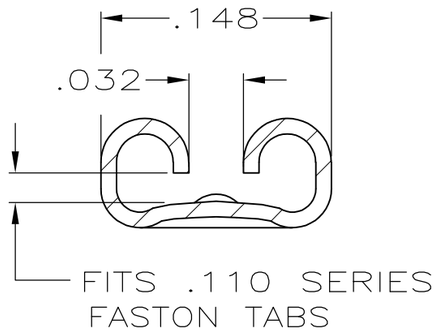

SECTION A-A
SCALE 10:1

1 CONTINUOUS STRIP ON REELS

2 TO BE REELED WITH PAPER.

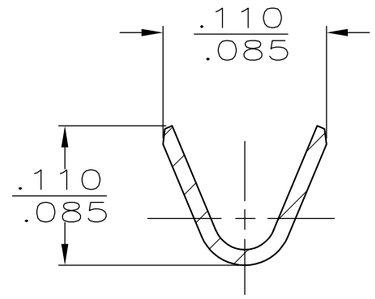

SECTION B-B
SCALE 10:1

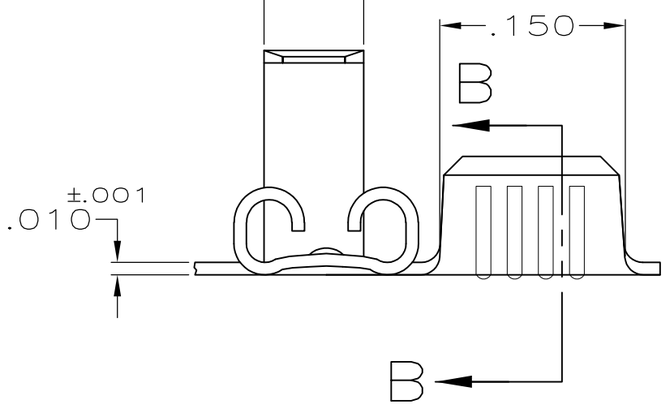

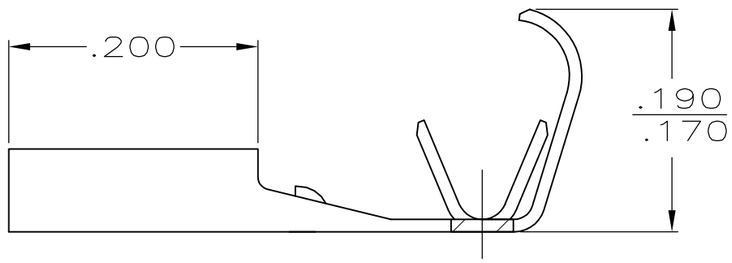

	MATERIAL	INSULATION RANGE	WIRE SIZE	MATING TAB THK ±.001	PART NO
OBSOLETE	~~#4H BRASS~~	.065-.100 DIA	22-18 AWG	.032	~~61971-3~~ 2
OBSOLETE	~~T4 PHOS BRZ.~~				~~61971-2~~
	BRASS				61971-1

THIS DRAWING IS A CONTROLLED DOCUMENT.

DIMENSIONS: INCHES

TOLERANCES UNLESS OTHERWISE SPECIFIED:

0 PLC	± -
1 PLC	± -
2 PLC	± -
3 PLC	± .015
4 PLC	± -
ANGLES	± -

MATERIAL: SEE TABLE

FINISH: PRE-TIN

DWN	JR RUTH	4/24/91
CHK	MS FEHER	4/24/91
APVD	C MEYERS	4/24/91
PRODUCT SPEC	—	
APPLICATION SPEC	—	
WEIGHT	—	

TE Connectivity

NAME: RECEPTACLE, FASTON, FLAG, .110 SERIES

SIZE	CAGE CODE	DRAWING NO	RESTRICTED TO
A3	00779	C-61971	—

CUSTOMER DRAWING

SCALE	SHEET	REV
8:1	1 OF 1	L