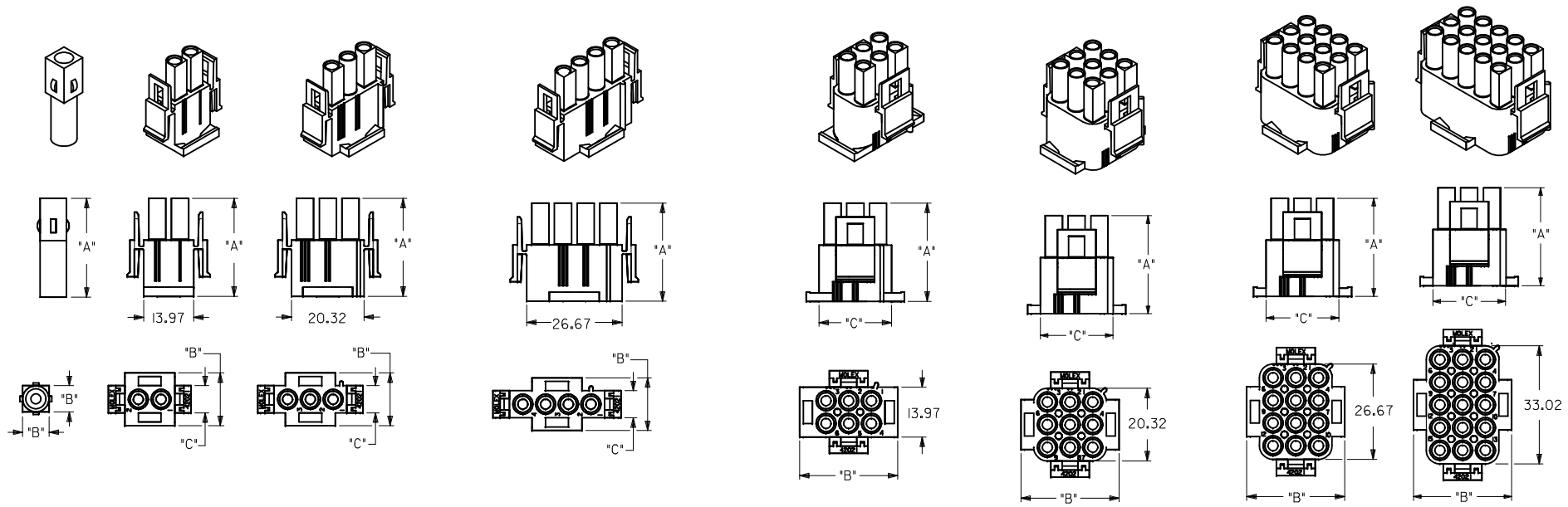

ENTER DESCRIPTION EC NO: 12013-0100 DRWN:MRAMAKRISHNA 2013/01/07 CH'KD: APPR:KPRASAD 2013/03/11 DESCRIPTION REV C6	QUALITY SYMBOLS E/A=0 E/C=0 E/P=0	GENERAL TOLERANCES (UNLESS SPECIFIED) mm / INCH 4 PLACES ± --- / ± --- 3 PLACES ± --- / ± .010 2 PLACES ± 0.25 / ± 0.14 1 PLACE ± 0.36 / ± --- 0 PLACE ± / ± ANGULAR ±---° DRAFT WHERE APPLICABLE MUST REMAIN WITHIN DIMENSIONS	DIMENSION STYLE MM ONLY DRAWN BY RK DATE 87/11/16 CHECKED BY GWF DATE 87/11/16 APPROVED BY GWF DATE 87/11/16 MATERIAL NO. SEE SHEET 2	SCALE 1:1 DESIGN UNITS METRIC THIRD ANGLE PROJECTION TITLE HOUSING, PLUG 2.13 DIA. SERIES molex DOCUMENT NO. SD-42021-** SHEET NO. 1 OF 2	SIZE A2	THIS DRAWING CONTAINS INFORMATION THAT IS PROPRIETARY TO MOLEX INCORPORATED AND SHOULD NOT BE USED WITHOUT WRITTEN PERMISSION

tb_frame_A2_P_AM_T
Rev. G 2012/01/11

PART NO.	CIRCUIT SIZE	MATERIAL (SEE NOTE 1)	DIM "A"	DIM "B"	DIM "C"
050-84-1010	1	A	27.69	7.37	----
050-84-1015	1	C			
050-84-1020	2	A	27.61	14.73	7.62
050-84-1025	2	C			
050-84-1030	3	A	27.61	14.73	7.62
050-84-1035	3	C			
050-84-1040	4	A	27.61	14.73	7.62
050-84-1045	4	C			
050-84-1060	6	A	27.61	27.43	20.32
050-84-1065	6	C			
050-84-1090	9	A	27.61	27.43	20.32
050-84-1095	9	C			
050-84-1120	12	A	27.61	27.43	20.32
050-84-1125	12	C			
050-84-1150	15	A	27.61	27.43	20.32
050-84-1155	15	C			
366480001	1	D	27.43	7.37	----
366480002	2	D		14.73	7.62
366480003	3	D			
366480004	4	D			
366480005	6	D	27.43	27.43	20.32
366480006	9	D			
366480007	12	D			
366480008	15	D			

NOTES:

1) MATERIAL CODES:
   "A"= NYLON TYPE 6/6, 94V-2
   COLOR: NATURAL (WHITE/TRANSLUCENT)
   "C"= NYLON TYPE 6/6, 94V-0
   COLOR: NATURAL (WHITE)
   "D"= NYLON, 94V-2
   COLOR: BLACK (ZYTEL 101F)
2) UNLESS OTHERWISE INDICATED, DIMENSIONS ARE FOR REFERENCE ONLY.
3) PLUG HOUSINGS MATE WITH :
   - CAP HOUSINGS, 2.13 DIA. SERIES: (42022-**)
   - HEADER ASSEMBLY HOUSINGS, 2.13 DIA. SERIES: (A-42002-*****)
4) HOUSINGS DESIGNED TO BE USED WITH TERMINALS :
   - PINS, 2.13 DIA. SERIES: (42023-****)
   - SOCKETS, 2.13 DIA. SERIES: (42024-****)
5) CONTACTS ARE ON 6.35 GRID CENTERLINE SPACING.
6) PRODUCT SPECIFICATION PS-42022-0001 APPLIES.
7) FOR GLOW EIRE COMPATIABLE PART NUMBERS REFER DOCUMENT NO SD-36643-009.

ENTER DESCRIPTION
EC NO: 12013-0100
DRWN: MRAMAKRISHNA 2013/01/07
CH'KD:
APPR: KPRASAD 2013/03/11
DESCRIPTION
C6
REV

QUALITY SYMBOLS
E/A=0
E/E=0
E/P=0

GENERAL TOLERANCES (UNLESS SPECIFIED)

	mm	INCH
4 PLACES	± ---	± ---
3 PLACES	± ---	± .010
2 PLACES	± 0.25	± 0.14
1 PLACE	± 0.36	± ---
0 PLACE	±	±
ANGULAR	±---°	

DRAFT WHERE APPLICABLE MUST REMAIN WITHIN DIMENSIONS

DIMENSION STYLE: MM ONLY
SCALE: 1:1
DESIGN UNITS: METRIC
THIRD ANGLE PROJECTION

DRAWN BY: RK DATE: 87/11/16
CHECKED BY: GWF DATE: 87/11/16
APPROVED BY: GWF DATE: 87/11/16
MATERIAL NO.: SEE TABLE

TITLE: HOUSING, PLUG 2.13 DIA. SERIES

molex

DOCUMENT NO.: SD-42021-**
SHEET NO.: 2 OF 2
SIZE: A2

THIS DRAWING CONTAINS INFORMATION THAT IS PROPRIETARY TO MOLEX INCORPORATED AND SHOULD NOT BE USED WITHOUT WRITTEN PERMISSION

tb_frame_A2_P_AM_T
Rev. G 2012/01/11