THIS DRAWING IS UNPUBLISHED. RELEASED FOR PUBLICATION -,- .
© COPYRIGHT - By - ALL RIGHTS RESERVED.

LOC	DIST
AF	50

REVISIONS

P	LTR	DESCRIPTION	DATE	DWN	APVD
	B	REVISED PER ECR-12-013445	18OCT12	KH	PD

1. SUPPLIED IN LOOSE PIECE
2. MATING TAB THK IS .032±.001
3. WIRE SIZE IS #14 - #12 AWG
4. INSULATION RANGE IS .160 MAX DIA

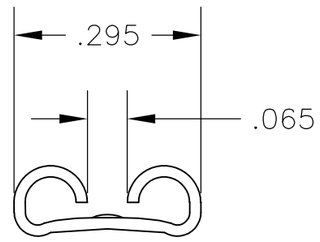

VIEW A-A

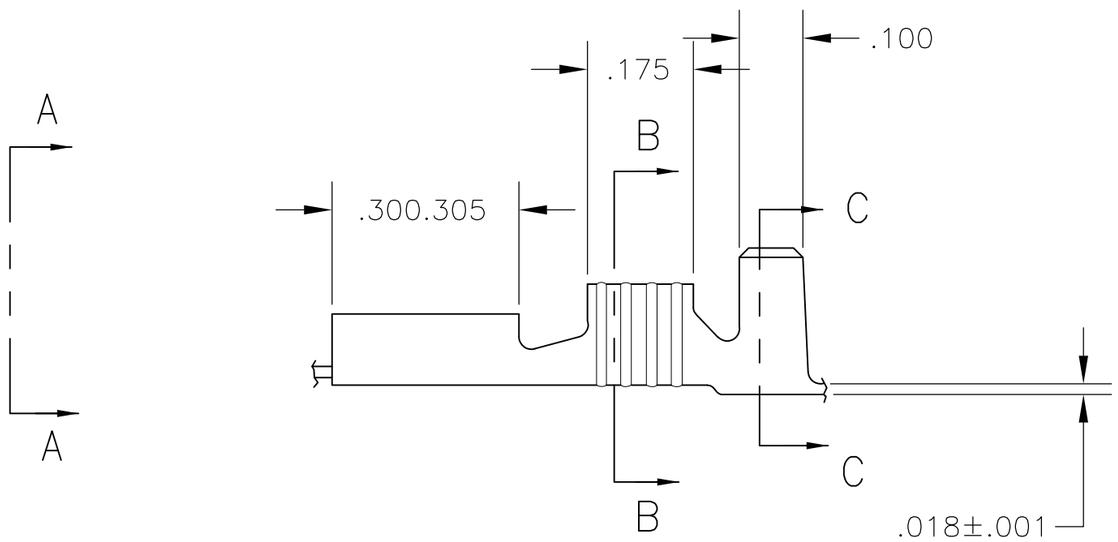

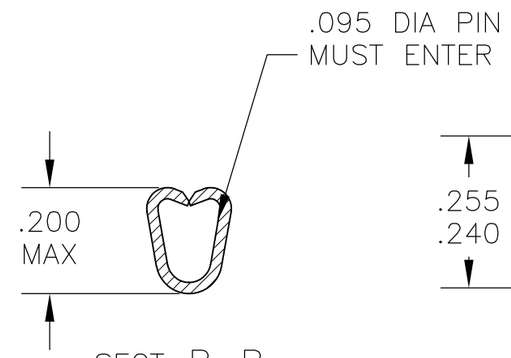

SECT B-B
PRE-CRIMP WITH
.140 F CRIMPER

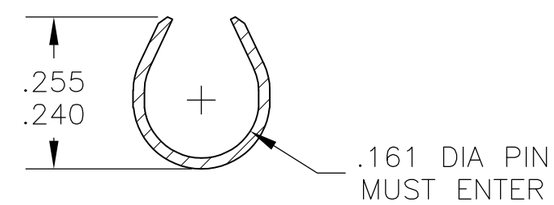

SECT C-C
PRE-CRIMP WITH
.210 F CRIMPER

41858-1

PART NO.

THIS DRAWING IS A CONTROLLED DOCUMENT.

DIMENSIONS: INCHES

TOLERANCES UNLESS OTHERWISE SPECIFIED:

0 PLC	± -
1 PLC	± -
2 PLC	± .010
3 PLC	± -
4 PLC	± -
ANGLES	± -

MATERIAL: BRASS

FINISH: -

DWN	JR RUTH	20FEB06
CHK	P DESANTIS	20FEB06
APVD	P DESANTIS	20FEB06
PRODUCT SPEC	—	
APPLICATION SPEC	—	
WEIGHT	—	

TE Connectivity

NAME: RECEPTACLE, FASTON, .250 SERIES, PRE-CRIMP

SIZE	CAGE CODE	DRAWING NO	RESTRICTED TO
A3	00779	C-41858	—

CUSTOMER DRAWING

SCALE	SHEET	REV
4:1	1 OF 1	B