FRONT VIEW – MALE INSERT CONFIGURATION CHART

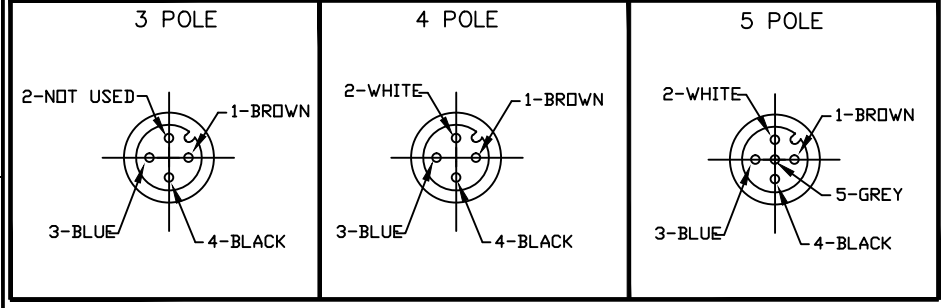

POLE	MATERIAL NO.	ENGINEERING NO.	FINISHED LENGTH
3	1200700090	8R3006A16M010	3'3" +2.19-0 (1M +55.6mm-0)
4	1200700175	8R4006A16A120	12.0" +.75-0 (.3M +19mm-0)
5	1200700250	8R5006A16M020	6'7" +3.50-0 (2M +88.9mm-0)

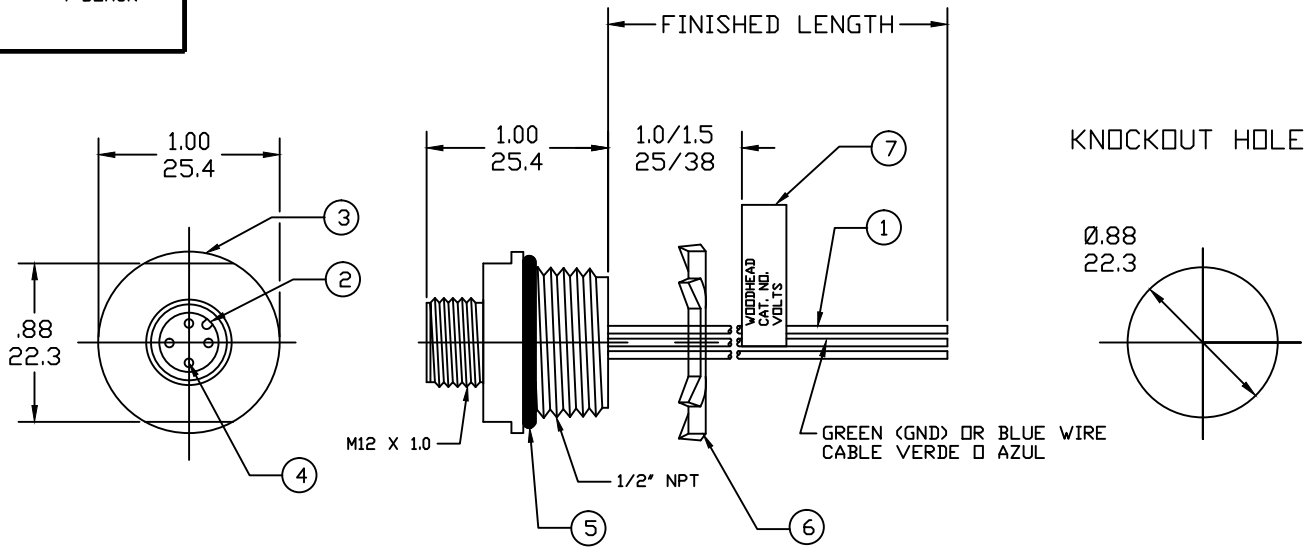

CONNECTOR SPECIFICATION:

VOLTAGE RATING 3 - 4 PIN	250V per IEC 60664
VOLTAGE RATING 5 PIN	60V per IEC 60664 250V per UL 2238
AMPERAGE RATING	4 AMPS
PROTECTION	IP67
OPERATING TEMPERATURE	-20°C TO 80°C
UL CERTIFICATIONS	UL LISTED, FILE NO. E152210
CSA CERTIFICATIONS	CSA CERTIFIED,FILE NO. LR6837

ITEM	COMPONENT	MATERIAL	FINISH
7	LABEL	MYLAR	BLACK/YELLOW
6	LOCKNUT	STEEL	ZINC PLATED
5	O-RING	VITON	BLACK
4	CONTACT SOCKET	COPPER ALLOY	GOLD OVER NICKEL
3	SHELL FEMALE M12x1	ALUMINUM	BLACK ANODIZED
2	MALE INSERT	NYLON	BLACK
1	CONDUCTOR- 18 AWG 3-5 CONDUCTOR 300V	PVC	SEE WIRING DIAGRAMM

NEW SALES DOC
EC NO:IPG2017-0318 2016/09/21
DRWN:BBRAUCH 2016/09/21
CH'KD:RSILLER 2016/09/21
APPR:RSILLER 2013/02/07
DESCRIPTION
A2
REV

QUALITY SYMBOLS
▼=0
(C)=0

GENERAL TOLERANCES (UNLESS SPECIFIED)	mm	INCH
4 PLACES	±---	±---
3 PLACES	±---	±---
2 PLACES	±---	±.01
1 PLACE	±0.3	±---
ANGULAR ±2°		

DRAFT WHERE APPLICABLE MUST REMAIN WITHIN DIMENSIONS

DIMENSION STYLE: INCH/MM
SCALE: ---
DESIGN UNITS: INCH
THIRD ANGLE PROJECTION

DRAWN BY: RSTONE DATE: 2012/11/07
CHECKED BY: K JOZWIK DATE: 2012/11/28
APPROVED BY: JFMURPHY DATE: 2013/02/07
MATERIAL NO.: SEE CHART

TITLE: MICRO-CHANGE RECEPTACLE 3-5 POLE MALE #18/3-5 AWG PVC WIRE

molex MOLEX INCORPORATED

DOCUMENT NO.: SD-120070-044
SHEET NO.: 1 OF 1
SIZE: B

THIS DRAWING CONTAINS INFORMATION THAT IS PROPRIETARY TO MOLEX INCORPORATED AND SHOULD NOT BE USED WITHOUT WRITTEN PERMISSION