THIS DRAWING IS UNPUBLISHED. RELEASED FOR PUBLICATION - ,- .
© COPYRIGHT - BY TYCO ELECTRONICS CORPORATION. ALL INTERNATIONAL RIGHTS RESERVED.

LOC	DIST
AD	39

REVISIONS

P	LTR	DESCRIPTION	DATE	DWN	APVD
	AA1	REVISED PER ECO-08-017295	06NOV08	HMR	NE
	AA2	REVISED PER ECO-09-020689	31AUG09	KK	AEG

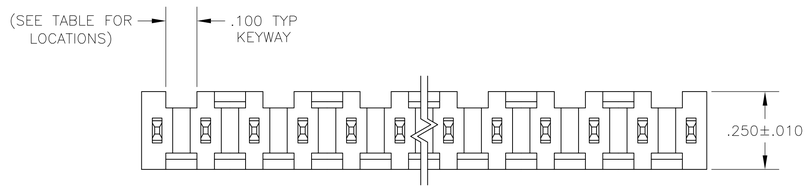

1. THESE SURFACES WILL NOT BE PLATED
2. THE NOTED DIMENSIONS APPLY AT THE INTERSECTION OF THE POST AND THE HOUSING
3. FINSH POSTS: .000100-.000200 TIN-LEAD OVER .000030 MIN NICKEL
4. FINSH POSTS: .000100-.000200 MATTE TIN OVER .000030 MIN NICKEL
5. OBSOLETE PARTS: OBSOLETE CIS STREAMLINING PER D.RENAUD/D.SINISI

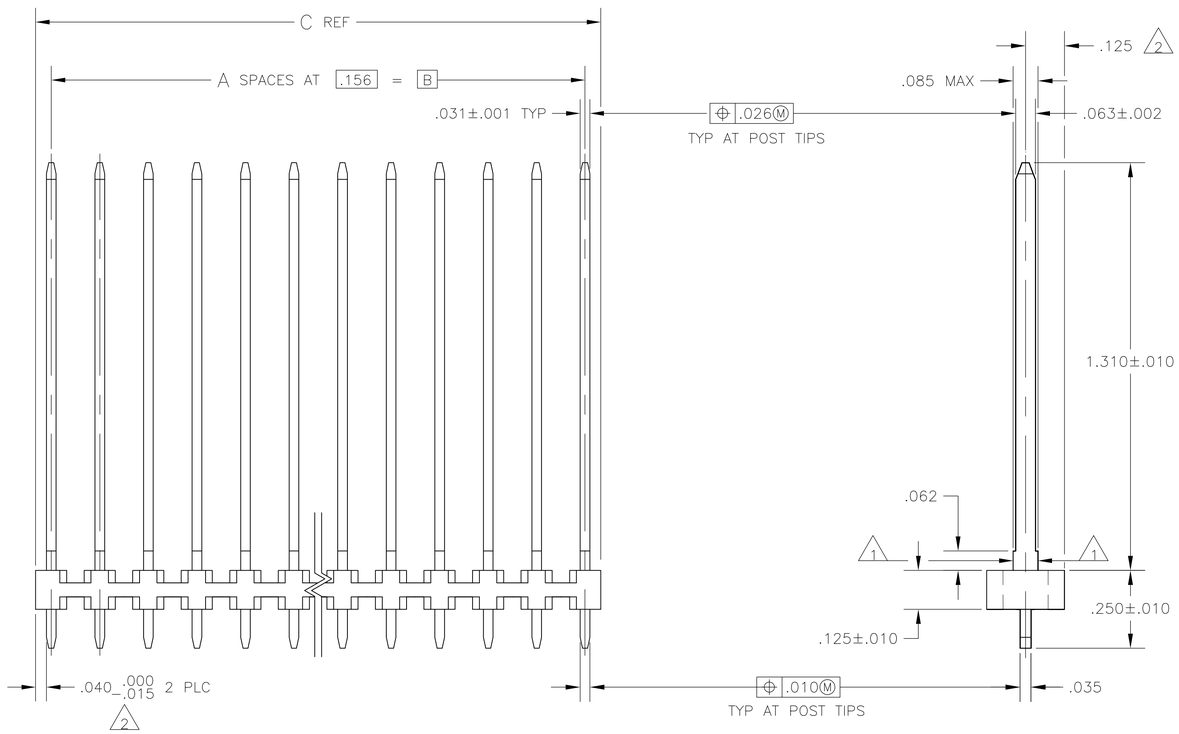

	4	A,C,E,H,K,M,Q,S,U,W,Y	11	3.855	3.744	24	25	7-85840-5
	4	A,C,E,G,J,L,N,Q,S,U,W,Y	12	3.699	3.588	23	24	7-85840-4
	4	A,D,G,K,N,R,U,X	8	3.543	3.432	22	23	7-85840-3
	4	A,C,E,G,J,L,N,Q,S,U,W	11	3.387	3.276	21	22	7-85840-2
	4	A,D,G,K,N,R,U	7	3.231	3.120	20	21	7-85840-1
	4	A,C,E,G,J,L,N,Q,S,U	10	3.075	2.964	19	20	7-85840-0
	4	B,D,F,J,L,N,Q,S	8	2.919	2.808	18	19	6-85840-9
	4	A,D,F,J,M,P,S	7	2.763	2.652	17	18	6-85840-8
	4	A,D,G,K,N,R	6	2.607	2.496	16	17	6-85840-7
	4	A,C,E,G,J,L,N,Q	8	2.451	2.340	15	16	6-85840-6
	4	A,D,G,K,N	5	2.295	2.184	14	15	6-85840-5
	4	A,C,E,G,J,L,N	7	2.139	2.028	13	14	6-85840-4
	4	A,D,J,M	4	1.983	1.872	12	13	6-85840-3
	4	A,C,E,G,J,L	6	1.827	1.716	11	12	6-85840-2
	4	A,D,G,K	4	1.671	1.560	10	11	6-85840-1
	4	A,C,E,G,J	5	1.515	1.404	9	10	6-85840-0
	4	A,D,G	3	1.359	1.248	8	9	5-85840-9
	4	A,C,E,G	4	1.203	1.092	7	8	5-85840-8
	4	A,C,E	3	1.047	.936	6	7	5-85840-7
	4	A,C,E	3	.891	.780	5	6	5-85840-6
	4	A,D	2	.735	.624	4	5	5-85840-5
	4	A,C	2	.579	.468	3	4	5-85840-4
	4	A	1	.423	.312	2	3	5-85840-3
	4	A	1	.267	.156	1	2	5-85840-2
	4	–	0	.111	–	1	1	5-85840-1
OBSOLETE		–	0	5.415	5.304	34	35	3-85840-5
OBSOLETE		–	0	5.259	5.148	33	34	3-85840-4
OBSOLETE		–	0	5.103	4.992	32	33	3-85840-3
OBSOLETE		–	0	4.947	4.836	31	32	3-85840-2
OBSOLETE		–	0	4.791	4.680	30	31	3-85840-1
OBSOLETE		–	0	4.635	4.524	29	30	3-85840-0
OBSOLETE		–	0	4.479	4.368	28	29	2-85840-9
OBSOLETE		–	0	4.323	4.212	27	28	2-85840-8
OBSOLETE		–	0	4.167	4.056	26	27	2-85840-7
OBSOLETE		–	0	4.011	3.900	25	26	2-85840-6
OBSOLETE 5	3	A,C,E,H,K,M,Q,S,U,W,Y	11	3.855	3.744	24	25	2-85840-5
	3	A,C,E,G,J,L,N,Q,S,U,W,Y	12	3.699	3.588	23	24	2-85840-4
	3	A,D,G,K,N,R,U,X	8	3.543	3.432	22	23	2-85840-3
	3	A,C,E,G,J,L,N,Q,S,U,W	11	3.387	3.276	21	22	2-85840-2
	3	A,D,G,K,N,R,U	7	3.231	3.120	20	21	2-85840-1
	3	A,C,E,G,J,L,N,Q,S,U	10	3.075	2.964	19	20	2-85840-0
	3	B,D,F,J,L,N,Q,S	8	2.919	2.808	18	19	1-85840-9
	3	A,D,F,J,M,P,S	7	2.763	2.652	17	18	1-85840-8
	3	A,D,G,K,N,R	6	2.607	2.496	16	17	1-85840-7
	3	A,C,E,G,J,L,N,Q	8	2.451	2.340	15	16	1-85840-6
	3	A,D,G,K,N	5	2.295	2.184	14	15	1-85840-5
	3	A,C,E,G,J,L,N	7	2.139	2.028	13	14	1-85840-4
	3	A,D,J,M	4	1.983	1.872	12	13	1-85840-3
	3	A,C,E,G,J,L	6	1.827	1.716	11	12	1-85840-2
	3	A,D,G,K	4	1.671	1.560	10	11	1-85840-1
	3	A,C,E,G,J	5	1.515	1.404	9	10	1-85840-0
	3	A,D,G	3	1.359	1.248	8	9	85840-9
	3	A,C,E,G	4	1.203	1.092	7	8	85840-8
	3	A,C,E	3	1.047	.936	6	7	85840-7
	3	A,C,E	3	.891	.780	5	6	85840-6
5 OBSOLETE	3	A,D	2	.735	.624	4	5	85840-5
5 OBSOLETE	3	A,C	2	.579	.468	3	4	85840-4
5 OBSOLETE	3	A	1	.423	.312	2	3	85840-3
5 OBSOLETE	3	A	1	.267	.156	1	2	85840-2
	3	–	0	.111	–	1	1	85840-1
	FINISH	KEYWAY LOCATIONS	NO OF KEYWAY	C	B	A	NO OF POSN	ASSEMBLY PART NUMBER

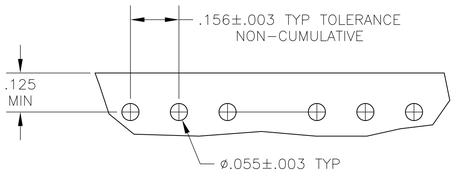

RECOMMENDED HOLE LAYOUT

KEYWAY LOCATIONS (REF-SEE TABLE)
(MATING LENGTH OF POST ON NEAR SIDE)
SCALE 2:1

THIS DRAWING IS A CONTROLLED DOCUMENT.

DIMENSIONS: INCHES

TOLERANCES UNLESS OTHERWISE SPECIFIED:
0 PLC ± –
1 PLC ± –
2 PLC ± –
3 PLC ± .005
4 PLC ± –
ANGLES ± –

MATERIAL: HOUSING – FLAME RETARDANT THERMOPLASTIC, COLOR – BLACK; POSTS – BRASS

FINISH: SEE TABLE

DWN L A MAYER 29APR87
CHK P de Jong 19MAY87
APVD P de Jong 19MAY87
PRODUCT SPEC 108-25016
APPLICATION SPEC –
WEIGHT –

Tyco Electronics
Tyco Electronics Corporation
Harrisburg, PA 17105-3608

NAME: HEADER ASSEMBLY, MOD I, VERTICAL, SINGLE ROW, .156 ℄

SIZE	CAGE CODE	DRAWING NO	RESTRICTED TO
A1	00779	C-85840	–

CUSTOMER DRAWING | SCALE 4:1 | SHEET 1 OF 1 | REV AA2

4805 (1/08)