THIS DRAWING IS UNPUBLISHED. RELEASED FOR PUBLICATION JUN ,2006.
© COPYRIGHT 2006 BY TYCO ELECTRONICS CORPORATION. ALL RIGHTS RESERVED.

LOC	DIST
E	B

REVISIONS

P	LTR	DESCRIPTION	DATE	DWN	APVD
	B	ECR-06-013423	15JUN06	JMS	FWK

NOTES:

1. PACK IN ACCORDANCE WITH AMP SPEC 107-3275
2. 100 TRAY PACK IN ACCORDANCE WITH AMP SPEC 107-3275
3. Ag PLATING
4. HAND TOOL : 9-1478240-0
5. DIE SET : 9-1478242-0
6. ELECTRICAL CHARACTERISTICS
   - FREQUENCY RANGE: DC - 2 GHz
   - NOMINAL IMPEDANCE: 75 Ohm
   - INSULATION RESISTANCE: 5000 MOhm
   - WORKING VOLTAGE: 500 Volts RMS at Sea Level
   - DIELECTRIC WITHSTAND VOLTAGE: 1500 Volts RMS Max
   - CONTACT RESISTANCE:
   - CENTRE CONTACT: 1.50 mOhm Max
   - OUTER CONTACT: 0.20 mOhm Max
   - VSWR @ 2GHz: 1.20:1 Max
   - INSERTION LOSS dB @ x 2 GHz: 0.20 Max
7. MECHANICAL CHARACTERISTICS
   - COUPLING RETENTION FORCE: N/A
   - CABLE RETENTION FORCE: 170N Min
   - DURABILITY: 500 Cycles Min
8. ENVIRONMENTAL CHARACTERISTICS
   - OPERATING TEMPERATURE: -65 to +165 DegC
9. FOR TECHNICAL DATA REFER TO YOUR LOCAL TYCO ELECTRONICS SALES OFFICE
10. ALL DIMENSIONS ARE NOMINAL FOR REFERENCE ONLY UNLESS OTHERWISE STATED

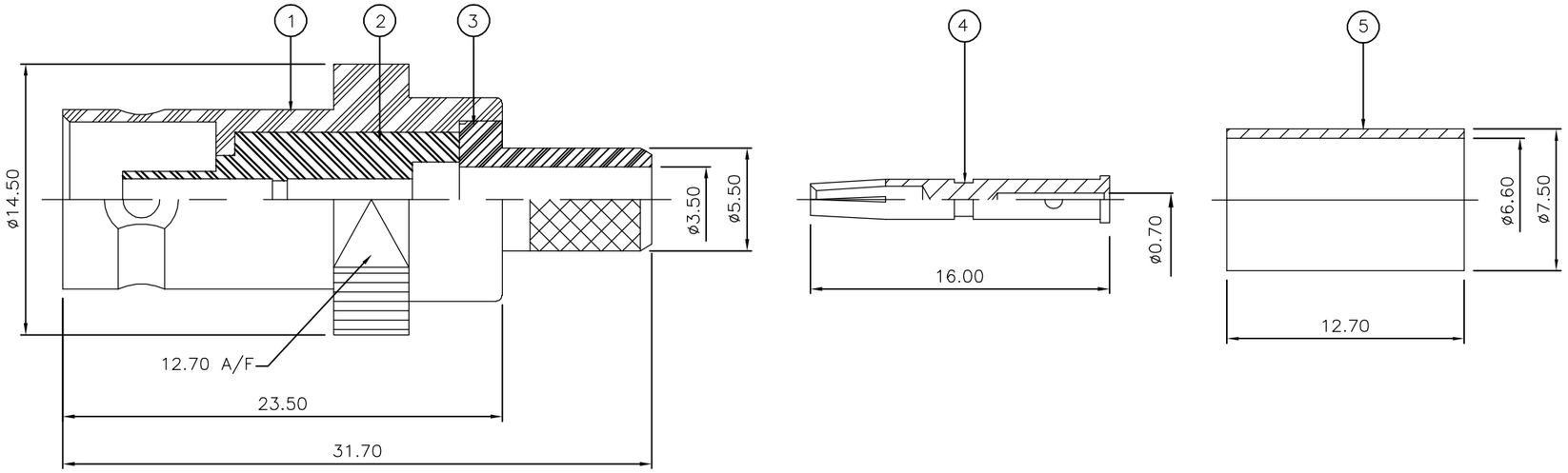

RECOMMENDED CENTRE CONTACT A/F HEX

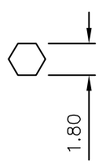

RECOMMENDED CRIMP SLEEVE A/F HEX

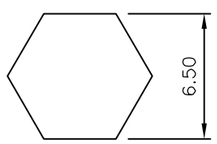

RECOMMENDED CABLE STRIPPING DIM'S

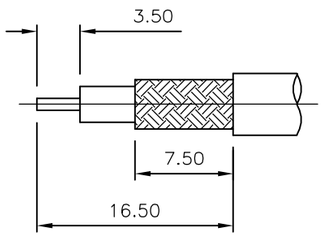

QUANTITY PER ASSY				MATERIAL	DESCRIPTION	ITEM
		1	1	BRASS ③	FERRULE	5
		1	1	BRASS ③	CONTACT	4
		1	1	BRASS ③	CHASSIS	3
		1	1	PTFE	INSULATION	2
		1	1	BRASS ③	BODY	1
		6--0	1--0			
		②	①			

PARTS LIST

THIS DRAWING IS A CONTROLLED DOCUMENT.

DIMENSIONS: mm

TOLERANCES UNLESS OTHERWISE SPECIFIED:
0 PLC ± -
1 PLC ± -
2 PLC ± -
3 PLC ± -
4 PLC ± -
ANGLES ± -

MATERIAL: SEE TABLE

FINISH: -

DWN	J.SANDWELL	15JUN06
CHK	S.PARLOW	15JUN06
APVD	F.WHEELER-KING	15JUN06
PRODUCT SPEC	-	
APPLICATION SPEC	411-3247	
WEIGHT	-	

CUSTOMER DRAWING

tyco Electronics

Tyco Electronics Corporation
Bideford EX39 4HE

NAME: BNC STRAIGHT JACK CRIMP 75 OHM URM70 -

SIZE	CAGE CODE	DRAWING NO	RESTRICTED TO
A3	00779	C-1478061	-

SCALE	SHEET	REV
NTS	1 OF 1	B