THIS DRAWING IS UNPUBLISHED. RELEASED FOR PUBLICATION -,- .
© COPYRIGHT - By - ALL RIGHTS RESERVED.

LOC	DIST
G	02

REVISIONS

P	LTR	DESCRIPTION	DATE	DWN	APVD
	E5	REVISED PER ECO-12-016518	13SEP12	KH	DR

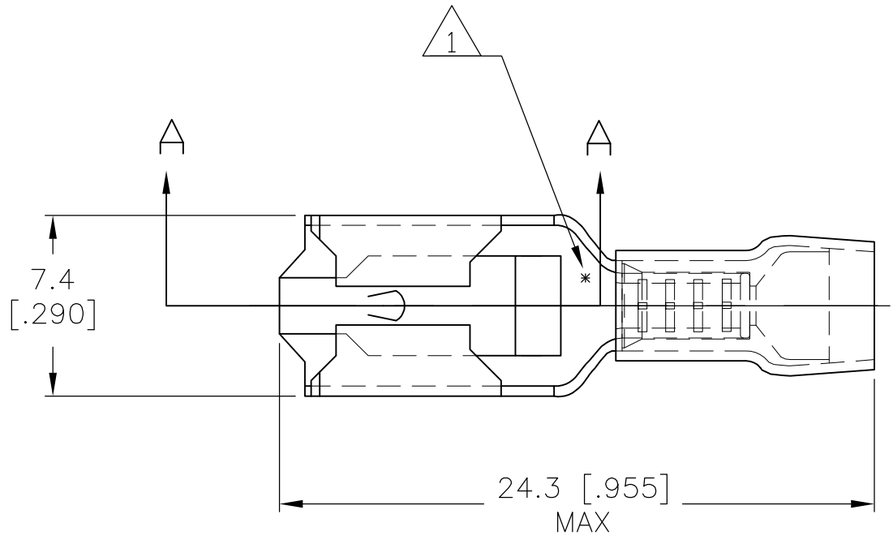

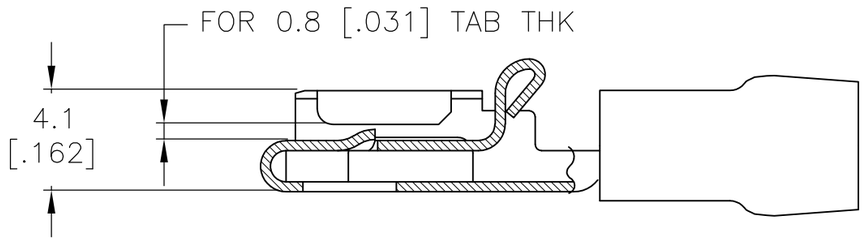

SECTION A-A

1. ASTERISK * FOR PHOS BRONZE ITEMS ONLY.
2. TAPE-MOUNTED VERSION OF 165536-1
3. BODY - BRASS PER ASTM B36
   SLEEVE - COPPER PER ASTM B152
   INSULATION - NYLON
4. BODY - TIN PLATE PER ASTM B545
   SLEEVE - TIN PLATE PER ASTM B545
   INSULATION - COLOR - BLUE
5. 90°C MAX OPERATING TEMP
6. 300 VOLT MAX
7. NOTE DELETED.

FINISH	MATERIAL	PART No.
TIN PLATED	BRASS	2-165536-2
TIN PLATED	PHOS BRONZE 1	165536-2
TIN PLATED	BRASS	165536-1

THIS DRAWING IS A CONTROLLED DOCUMENT.

DIMENSIONS: mm [INCHES]

TOLERANCES UNLESS OTHERWISE SPECIFIED:
0 PLC ± -
1 PLC ± -
2 PLC ± -
3 PLC ± 0.25[.010]
4 PLC ± -
ANGLES ± 5°

MATERIAL 3
FINISH 4

DWN jr ruth 15JAN07
CHK T MICHIELUTTI 15JAN07
APVD T MICHIELUTTI 15JAN07
PRODUCT SPEC —
APPLICATION SPEC —
WEIGHT —

TE Connectivity

NAME
RECEPTACLE, 6.35 [.250] SERIES,
POSITIVE-LOCK, PIDG,
WIRE SIZE: 1.5-2.5MM2

SIZE	CAGE CODE	DRAWING NO	RESTRICTED TO
A3	00779	C-165536	—

CUSTOMER DRAWING | SCALE 4:1 | SHEET 1 OF 1 | REV E5