Copyright FCI.

FCIconnect.com

PRODUCT NUMBER
20020012-XXXXXXXLF

20020012— □ □ □ □ □ 0 □ L F

PITCH

C: 3.50mm
D: 3.81mm
G: 5.00mm
H: 5.08mm

POLES

02: 2 POLES
03: 3 POLES
04: 4 POLES
|
24: 24 POLES

LF : DENOTED RoHS COMPATIBLE

1 : STANDARD PRODUCT W/ BOX PACKING

SCREW CODE

CODE	SCREW TYPE		AVAILABILTY
A	-/+	⊕	ON REQUEST ONLY
B	-	⊖	STANDARD

ALL FLANGE SCREWS ARE ONLY AVAILABLE IN +/- COMBINATION SCREW TYPES.

HOUSING CODE

CODE	COLOR	AVAILABILTY
1	GREEN(RAL 6018/T)	STANDARD
2	BLACK	ON REQUEST ONLY
3	GREY(RAL 7004/P)	ON REQUEST ONLY
4	BLUE(RAL 5015/A)	ON REQUEST ONLY

PROPERTY TABLE

FCI SERIES NAME			03-350	03-381	03-500	03-508
PITCH (mm)			3.50	3.81	5.00	5.08
VOLTAGE RATING (VAC)			300	300	300	300
CURRENT RATING (A)			10	10	10	10
APPLICABLE WIRE RANGE (AWG)		1-WIRE	16~28	16~28	12~22	12~22
		2-WIRE	20	20	18	18
WIRE CROSS SECTION (mm^2)	SOLID	1-WIRE	1.5	1.5	2.5	2.5
		2-WIRE	0.5	0.5	1.0	1.0
	STRANDED	1-WIRE	1.5	1.5	2.5	2.5
		2-WIRE	0.75	0.75	1.5	1.5
OPENING CONTACT HOUSING(mm^2)			1.8x2.4	1.8x2.4	2.6x2.8	2.6x2.8
WIRE STRIP LENGTH(mm)			6~7	6~7	6~7	6~7
TORQUE +/- 10% (N-m/Lb-in)			0.19/1.7	0.19/1.7	0.4/3.5	0.4/3.5
SCREW			M2x0.4	M2x0.4	M2.5x0.4	M2.5x0.4
WITHSTANDING VOLTAGE (kV)			1.6	1.6	1.6	1.6
OPERATING TEMP. (℃)			-40~+115	-40~+115	-40~+115	-40~+115
POLES AVAILABLE			02~24	02~24	02~24	02~24
SAFETY CERTIFICATE			c UL us		c UL us	

NOTES:
1. MATERIALS
   1-1 HOUSING: THERMALPLASTIC RESIN, UL 94V-0 RATED.
   1-2 SCREW: STEEL, ZINC PLATED.
   1-3 CLAMP: COPPER ALLOY, NICKEL PLATED.
   1-4 TERMINAL: COPPER ALLOY, TIN PLATED.
2. PRODUCT SPECIFICATION REFER TO FCI GS-12-625.
3. PRODUCT PACKING SPECIFICATION REFER TO FCI GS-14-1394.
4. FCI, SAFETY CERTIFICATE LOGO AND SERIES NAME TO BE SHOWN ON PRODUCT SURFACE.
5. THE PRODUCTS WHERE THE PART NUMBER END IN "LF" MEET THE EUROPEAN UNION DIRECTIVE AND OTHER COUNTRY REGULATIONS AS DESCRIBED IN GS-22-008.

mat'l. code				surface ASME Y14.5	tolerance ASME Y14.5	projection
ltr	ecn no	dr	date	tolerances unless otherwise specified		
A	T10-0082	WL	080810	angles	linear X.±0.5	MM [INCH]
B	T10-0158	WL	100410		X.X±0.3	
C	T10-0180	WL	111510	X°±1°	X.XX±0.1	scale
D	T10-0186	WL	120810	dr	WENDY CHEN 051810	
E	T11-0006	WL	012611	engr	JASON HSU 051810	
F	T-005908	WL	091311	chr	GARY HSIEH 051810	
				appd	JOSEPH HSIA 051810	
sheet index	revision	F	F	F	F	F
	sheet	1	2	3	4	5

product family: TERMINAL BLOCK

title: TERMINAL BLOCK PLUGGABLE, PLUG, SIGNAL, W/FLANGE FRONT SCREW

dwg no: 20020012 sheet 1 of 5 size A4

type: CUSTOMER Drawing

form: A4mmXLc

Copyright FCI.

FCIconnect.com

PRODUCT NUMBER	SERIES NAME	PITCH
20020012-CXXXXXXLF	03-350	3.50 mm

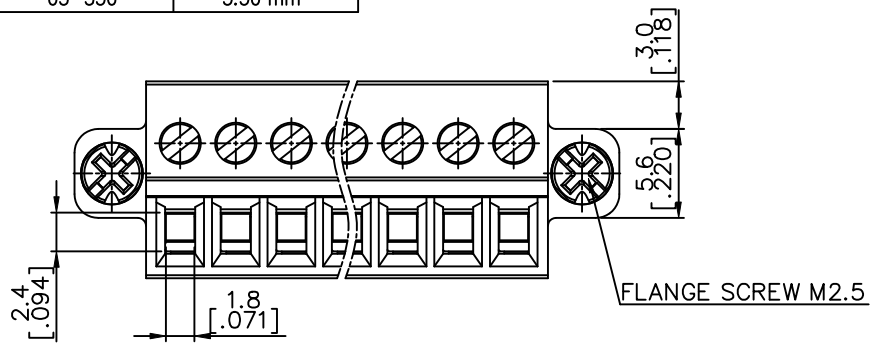

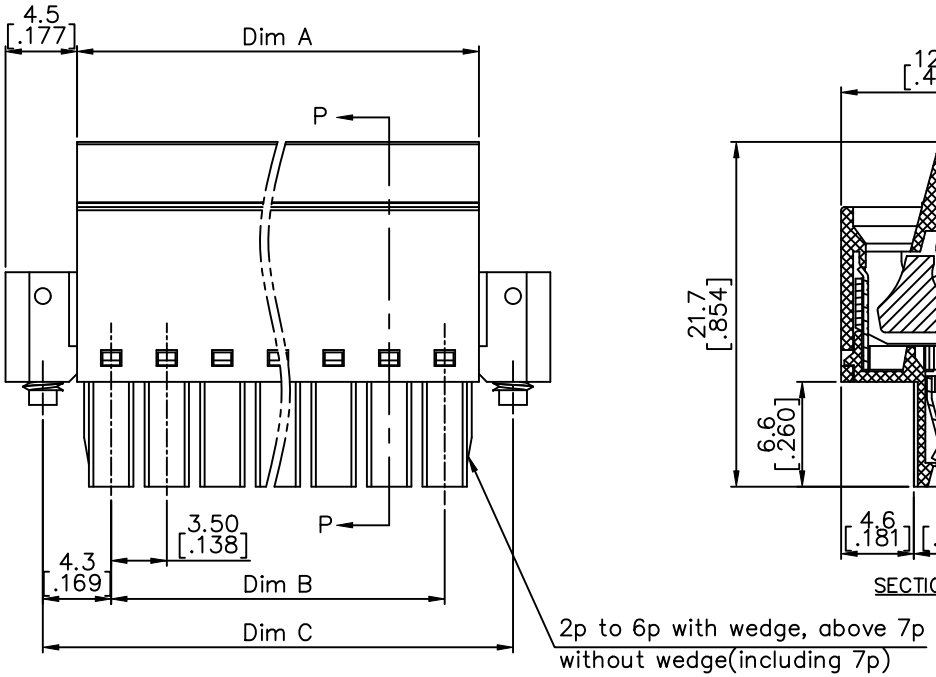

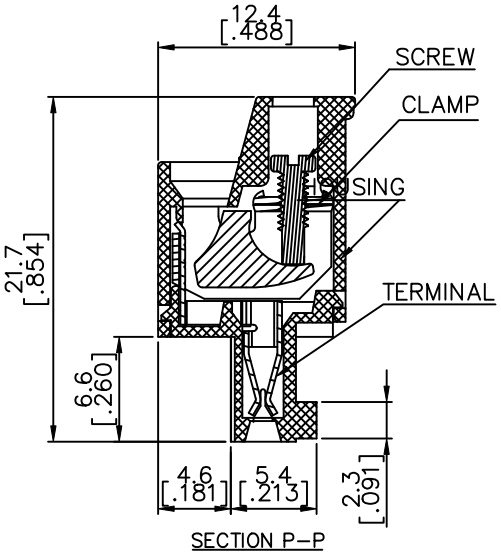

N = Number of poles
Dim A=Nx3.5[.138]+0.80[.031]
Dim B=(N-1)x3.5[.138]
Dim C=(N-1)x3.5[.138]+8.6[.339]

Poles	Dim A	Dim B	Dim C
2-4p	±0.10[.004]		±0.15[.006]
5-7p	±0.15[.006]		±0.20[.008]
8-12p	±0.20[.008]		±0.25[.010]
13-18p	±0.25[.010]		±0.30[.012]
19-24p	±0.30[.012]		±0.40[.016]

mat'l. code	surface ASME Y14.5	tolerance ASME Y14.5	projection
ltr / ecn no / dr / date	tolerances unless otherwise specified		
F	angles X°±1°	linear X.±0.5 / X.X±0.3 / X.XX±0.1	MM [INCH]
			scale
	dr	WENDY CHEN	051810
	engr	JASON HSU	051810
	chr	GARY HSIEH	051810
	appd	JOSEPH HSIA	051810
sheet index / revision sheet			

product family: TERMINAL BLOCK

title: TERMINAL BLOCK PLUGGABLE, PLUG, SIGNAL, W/FLANGE FRONT SCREW

dwg no: 20020012 — sheet 2 of 5 — size A4

type: CUSTOMER Drawing

Copyright FCI.

FCIconnect.com

PRODUCT NUMBER	SERIES NAME	PITCH
20020012-DXXXXXXLF	03-381	3.81 mm

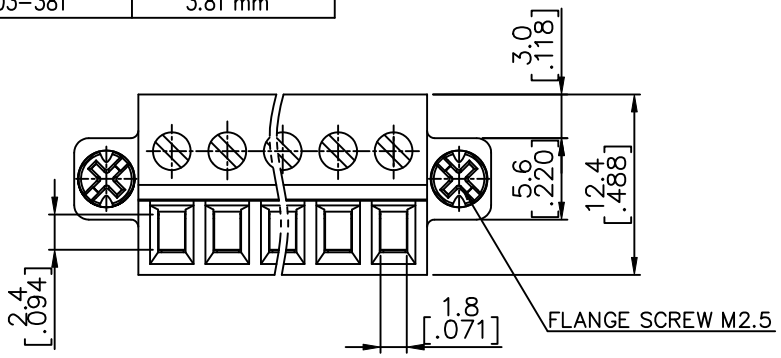

N = Number of poles
Dim A=Nx3.81[.150]+0.80[.031]
Dim B=(N−1)x3.81[.150]
Dim C= Nx3.81[.150]+9.6[.378]
Dim D= (N−1)x3.81[.150]+9.0[.354]

Poles	Tolerance
2−6p	±0.15[.006]
7−11p	±0.20[.008]
12−17p	±0.25[.010]
18−24p	±0.30[.012]

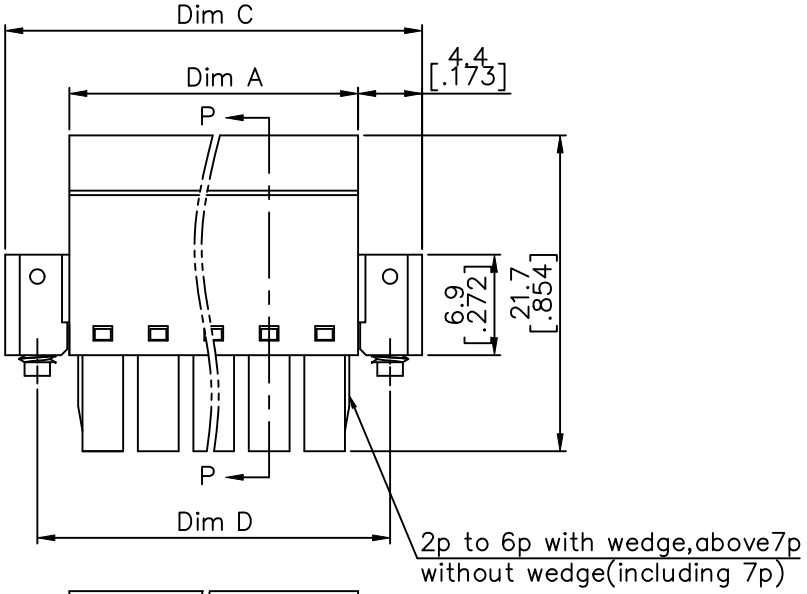

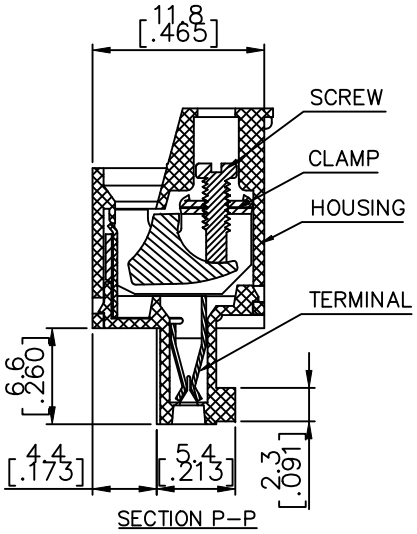

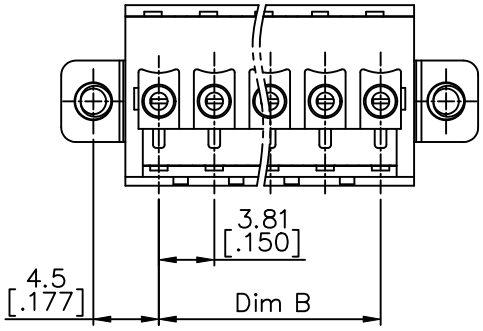

mat'l. code				surface ASME Y14.5	tolerance ASME Y14.5	projection	product family TERMINAL BLOCK
ltr	ecn no	dr	date	tolerances unless otherwise specified			title
F				angles	linear X.±0.5	MM [INCH]	TERMINAL BLOCK PLUGGABLE, PLUG, SIGNAL, W/FLANGE FRONT SCREW
				X°±1°	X.X±0.1	scale	
				dr	WENDY CHEN	051810	dwg no 20020012 sheet 3 of 5 size A4
				engr	JASON HSU	051810	
				chr	GARY HSIEH	051810	
				appd	JOSEPH HSIA	051810	type CUSTOMER Drawing
sheet index	revision sheet						

form: A4mmXLc

Copyright FCI.

FCIconnect.com

PRODUCT NUMBER	SERIES NAME	PITCH
20020012-GXXXXXXLF	03-500	5.00 mm

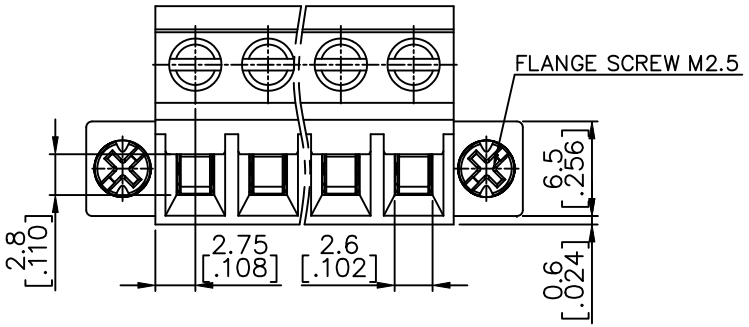

N = Number of poles
Dim A= Nx5.0[.197]+0.5[.020]
Dim B= (N−1)x5.0[.197]
Dim C= Nx5.0[.197]
Dim D= (N+1)x5.0[.197]
Dim E= (N+2)x5.0[.197]

Poles	Tolerance
2−7p	±0.15[.006]
8−12p	±0.25[.010]
13−18p	±0.30[.012]
19−24p	±0.40[.016]

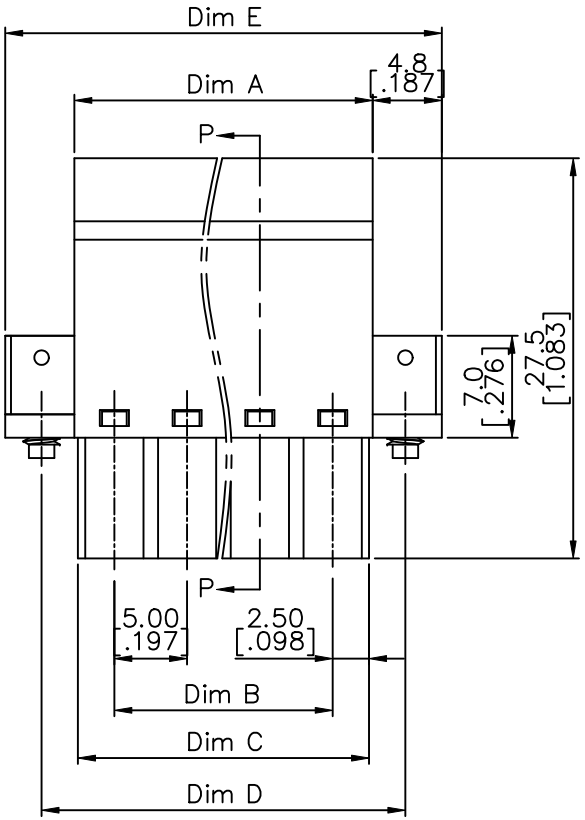

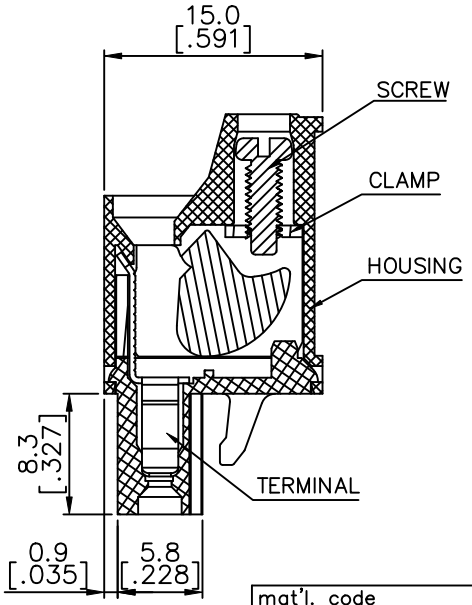

SECTION P−P

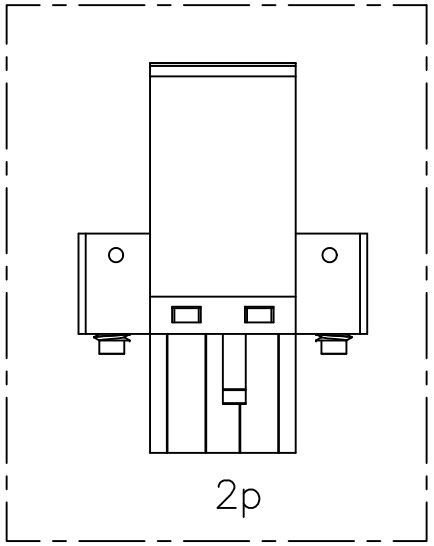

mat'l. code				surface ASME Y14.5	tolerance ASME Y14.5	projection	product family TERMINAL BLOCK
ltr	ecn no	dr	date	tolerances unless otherwise specified			title
F				angles	linear X.±0.5	MM [INCH]	TERMINAL BLOCK PLUGGABLE, PLUG, SIGNAL, W/FLANGE FRONT SCREW
				X°±1°	X.X±0.3		
					X.XX±0.1	scale	
				dr	WENDY CHEN 051810		dwg no 20020012 sheet 4 of 5 size A4
				engr	JASON HSU 051810		
				chr	GARY HSIEH 051810		
				appd	JOSEPH HSIA 051810		type CUSTOMER Drawing
sheet index	revision sheet						

form: A4mmXLc

PDS: Rev :F STATUS:Released Printed: Apr 20 2012

Copyright FCI.

FCIconnect.com

PRODUCT NUMBER	SERIES NAME	PITCH
20020012-HXXXXXXLF	03-508	5.08 mm

N = Number of poles
Dim A= Nx5.08[.200]+0.50[.020]
Dim B= (N-1)x5.08[.200]
Dim C= Nx5.08[.200]
Dim D= (N+1)x5.08[.200]
Dim E= (N+2)x5.08[.200]

Poles	Tolerance
2-6p	±0.15[.006]
7-12p	±0.25[.010]
13-18p	±0.30[.012]
19-24p	±0.40[.016]

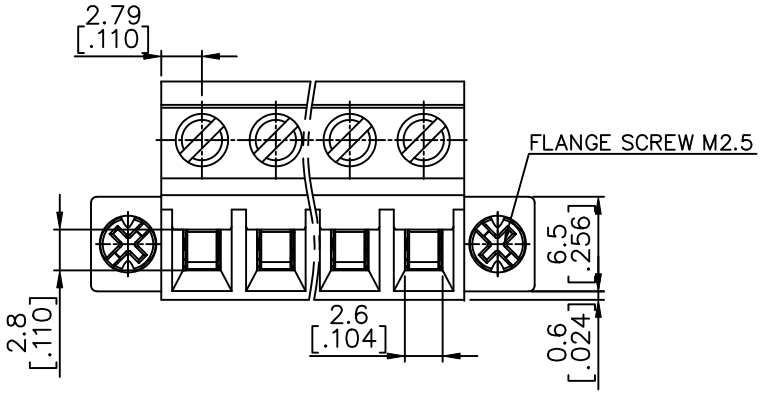

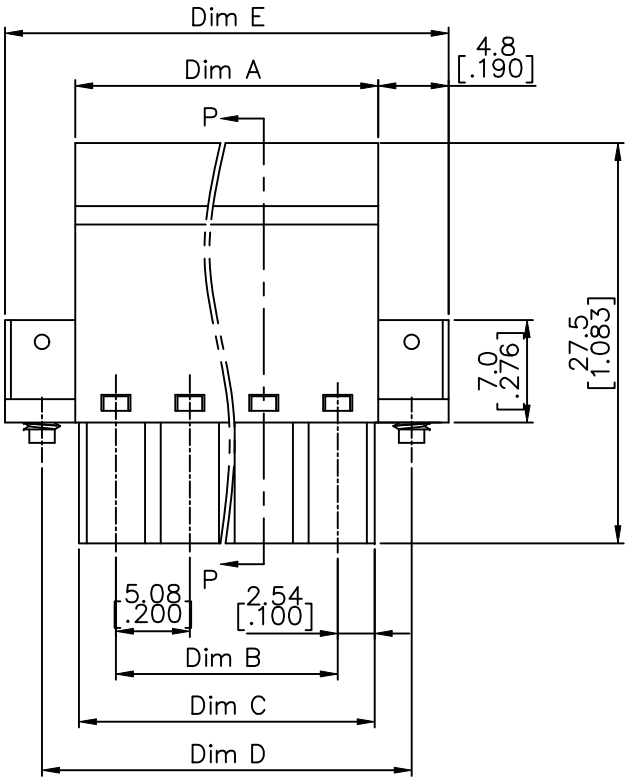

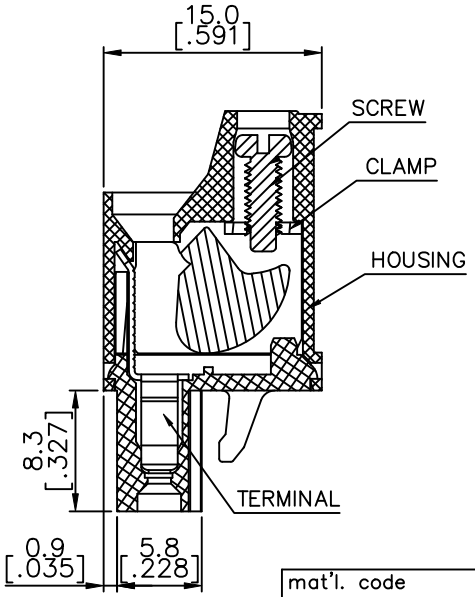

SECTION P-P

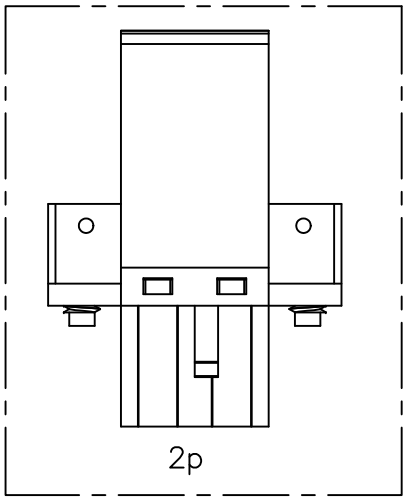

mat'l. code				surface ASME Y14.5	tolerance ASME Y14.5	projection	product family TERMINAL BLOCK
ltr	ecn no	dr	date	tolerances unless otherwise specified			title
F				angles	linear X.±0.5	MM [INCH]	TERMINAL BLOCK PLUGGABLE, PLUG, SIGNAL, W/FLANGE FRONT SCREW
				X°±1°	X.X±0.3		
					X.XX±0.1	scale	
				dr	WENDY CHEN 051810		dwg no 20020012 sheet 5 of 5 size A4
				engr	JASON HSU 051810		
				chr	GARY HSIEH 051810		
				appd	JOSEPH HSIA 051810		type CUSTOMER Drawing
sheet index	revision sheet						

form: A4mmXLc