THIS DRAWING IS UNPUBLISHED. RELEASED FOR PUBLICATION -,- .
© COPYRIGHT - BY TYCO ELECTRONICS CORPORATION. ALL RIGHTS RESERVED.

LOC	DIST
GP	00

REVISIONS

P	LTR	DESCRIPTION	DATE	DWN	APVD
	O	RELESED PER EC 0S13-0024-04	13FEB04	BM	JG

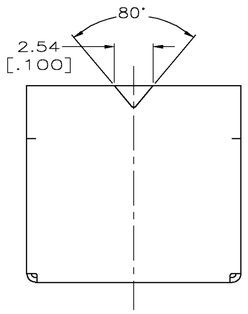

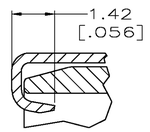

SECTION Z-Z
SCALE 10:1

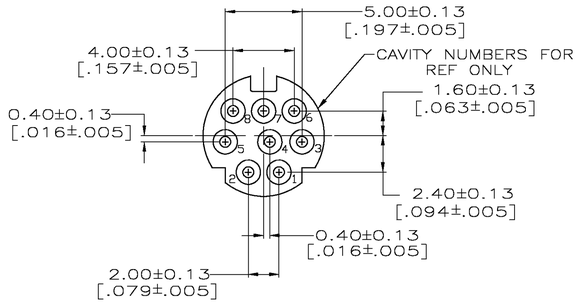

DETAIL D
8 PIN FACE

1. RECEPTACLE CONTACTS: COPPER ALLOY.
RECEPTACLE SHIELD: COPPER ALLOY.
HOUSING: LCP, COLOR; BLACK, UL 94V-O RATED.

2. PLATING:
RECEPTACLE CONTACTS - GOLD PLATED 0.00076 [.000030] MIN
ON MATING END, TIN PLATED 0.0030 [.000120] MIN
ON SOLDER TAIL, ALL OVER 0.0013 [.000050] MIN NICKEL.

3. PLATING:
SHIELD: 0.0015-0.004 [.000059-.000158] BRIGHT TIN.

4. RECEPTACLE ASSEMBLY MATES WITH 8 PIN 9.00± 0.10 [.354±.004] DIAMETER PLUG.

5. DATUMS AND BASIC DIMENSION DETERMINED BY CUSTOMER.

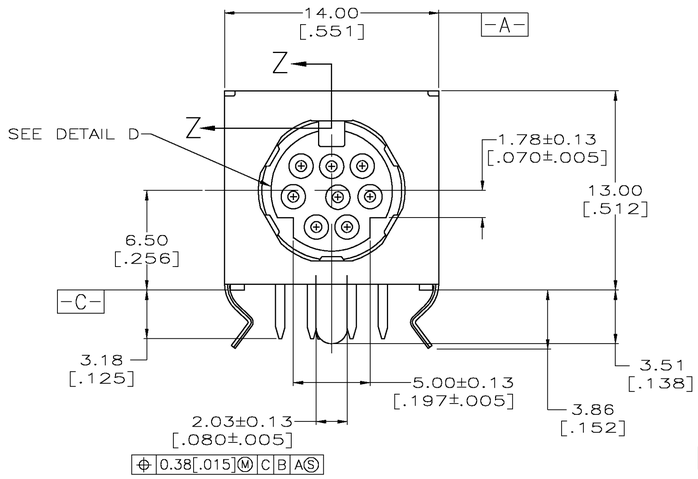

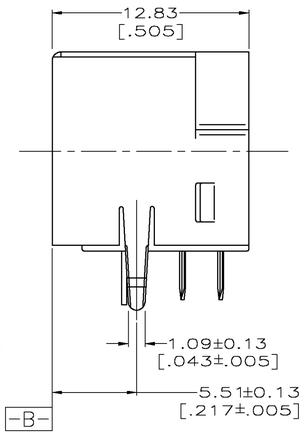

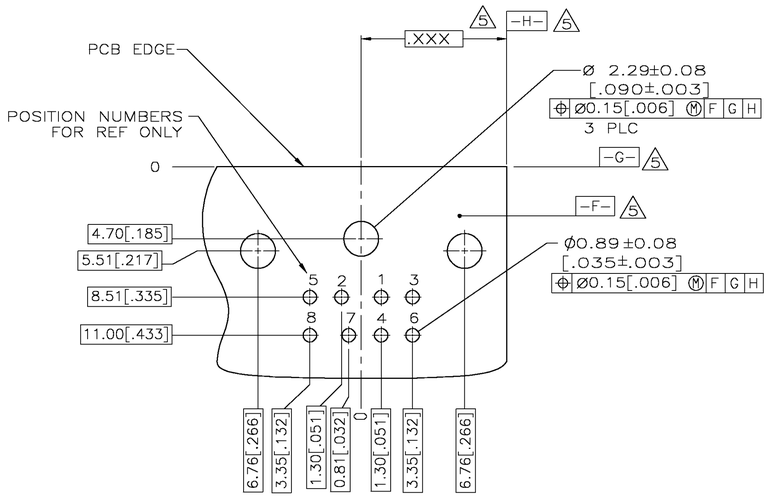

RECOMMENDED PC BOARD LAYOUT
BOTTOM VIEW

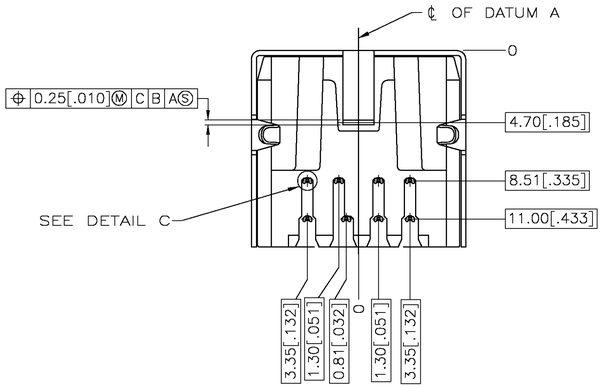

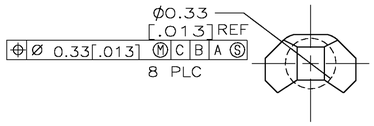

DETAIL C
SCALE 50:1

1658998-1
PART NUMBER

THIS DRAWING IS A CONTROLLED DOCUMENT.

DIMENSIONS: mm [INCHES]

TOLERANCES UNLESS OTHERWISE SPECIFIED:
0 PLC ± -
1 PLC ± -
2 PLC ± -
3 PLC ± 0.38 [.015]
4 PLC ± -
ANGLES ± 0°30'

MATERIAL 1
FINISH 2 3

DWN B. MCMASTER 13FEB2004
CHK C. ROHDE 13FEB04
APVD M. WALMSLEY 13FEB04
PRODUCT SPEC 108-1225
APPLICATION SPEC -
WEIGHT -

Tyco Electronics Corporation
Harrisburg, Pa 17105-3608

NAME RECEPTACLE ASSY W/HOLD DOWN, 8 POS RIGHT ANGLE, MINIATURE CIRCULAR DIN

SIZE	CAGE CODE	DRAWING NO	RESTRICTED TO
A1	00779	C-1658998	-

CUSTOMER DRAWING SCALE 5:1 SHEET 1 OF 1 REV O