Part Number:	**BU-1150-C-**- ***
Description:	**Mini-Plunger to BNC Male with RG58**

1108

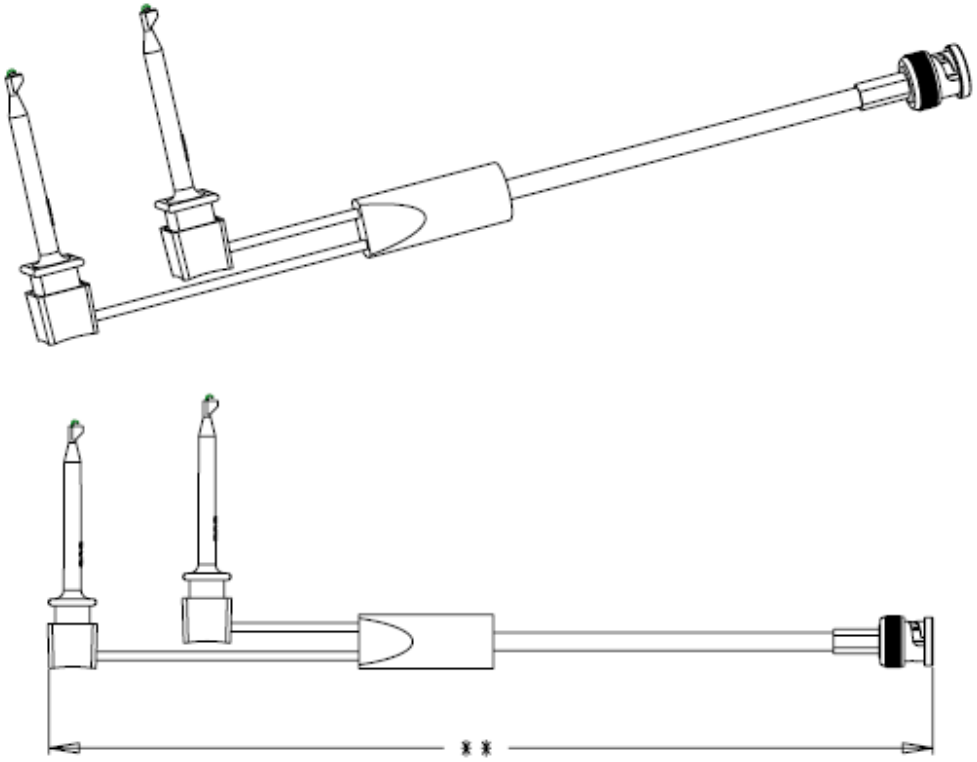

- Mini-Plunger to BNC Male with RG58
- Material: BNC Connector: MIL-C-30912, gold-plated center contact and silver-plated body; Coaxial Cable: shielded RG58C/U, MIL-C-17F, 50 ohm; Plunger: nylon housing; stainless steel spring and Beryllium copper contact
- **Length: -12”(.3m), -24”(.6m), -36”(.9m), -48”(1.2m), -60”(1.5m)
- Rating: Hands free testing at 300VRMS
- RoHS Compliant

Mueller Electric Company
1625 E. 31st Street
Cleveland, Ohio 44114

ISO 9001:2000
Over 95 Years Of Innovation
www.muellerelectric.com

TEL. 800-955-2629
TEL. 216-771-5225
FAX. 216-771-3068