PLATING CODE X	PLATING	HSG COLOR
0	30μ" G.X.T.	GRAY
1	15μ" AU	
2	20μ" GFPD	
3	30μ" AU	
5	50μ" AU	
6	6μ" AU	
7	2μ" AU	

PRODUCT NUMBER	NUMBER OF POS.	DIM A	DIM B	DIM C	DIM D	DIM E	DIM F	DIM G	LOADED POSITION	PRODUCT FIGURE
94770-X44	4	3.05	3.81	7.62	11.20	3.05	5.50	7.87	ALL POS.	FIGURE 1
94770-X42									2,3	
94770-X66	6	5.08	6.35	10.16	13.20	4.06	6.60	9.90	ALL POS.	
94770-X64									2,3,4,5	
94770-X62									3,4	
94770-X88	8	7.11	8.89	11.43	15.24	4.06	6.30	11.94	ALL POS.	FIGURE 2
94770-X86									2,3,4,5,6,7	
94770-X84									3,4,5,6	

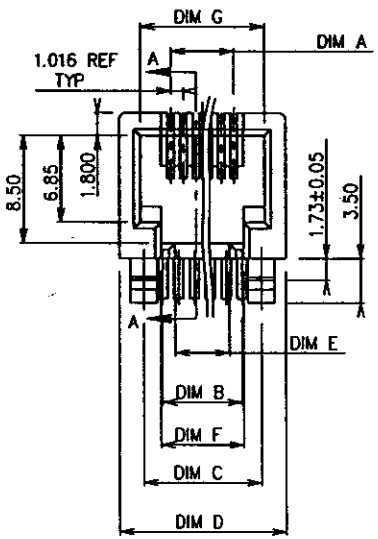

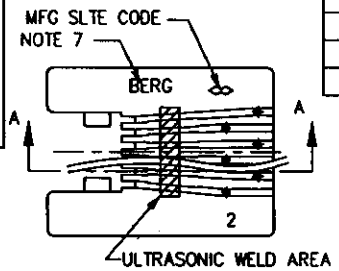

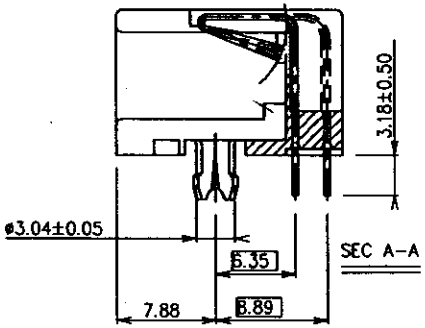

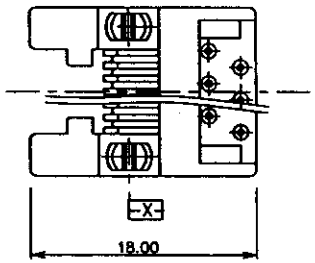

FIGURE 1 – 4 & 6 POS. TYPES.

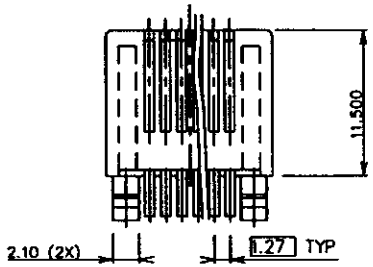

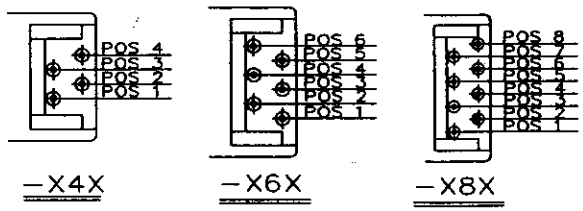

WIRE POSITION No

mat'l code				tolerance unless otherwise specified		CUSTOMER COPY	BERG ELECTRONICS
rev.	ecn no.	dr	date	linear	.0 ± 0.20		
A	T40047				.00 ± 0.10	projection	title LOW PROFILE PCB III HORZ MOD JACK, FOR 1.6MM P.C.B.
B	T40242		10/11/94		.000± 0.05		
C	T50234	C L	08/14/95	angles	± 2°		
				dr	D K LIN 04/02/94	unit mm/inch	product family / code TWN
				engr	TONY CHIEN 04/02/94		size A3 / dwg no. 94770
				chr	TONY CHIEN 04/02/94	scale 1/1	
				appd	JENN TSAO 04/02/94		sheet 1 OF 2
sheet index	revision sheet	C 1	C 2				

Tous droits strictement reservés. Reproduction ou communication a des tiers ni sous quelque forme que ce soit sans autorisation ecrite du propriétaire. propriété de c BERG ELECTRONICS. Droits de reproduction BERG ELECTRONICS bv

All rights strictly reserved. Reproduction or issue to third parties in any form whatsoever is not permitted without written authority from the proprietor. property of c BERG ELECTRONICS. Copyright BERG ELECTRONICS bv

PDM: Rev:C STATUS Released Printed: Jul 29, 2010

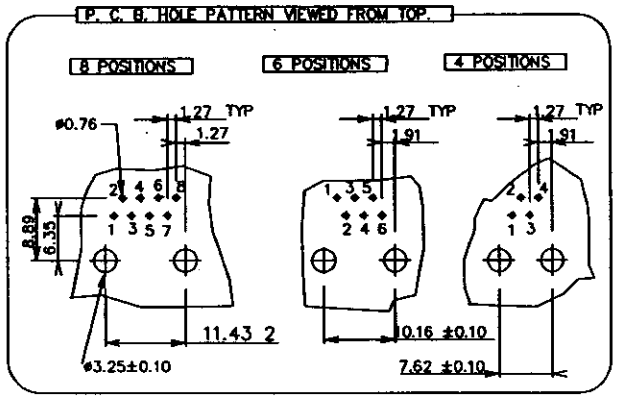

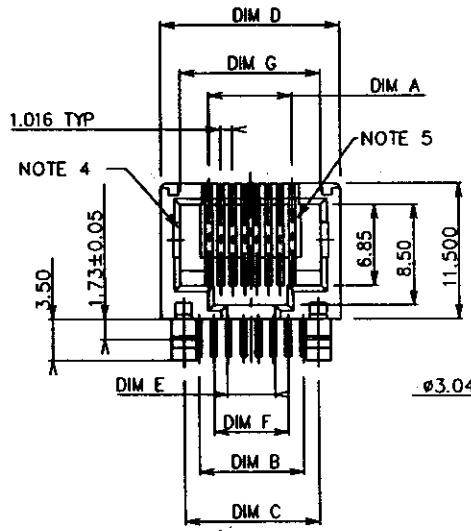

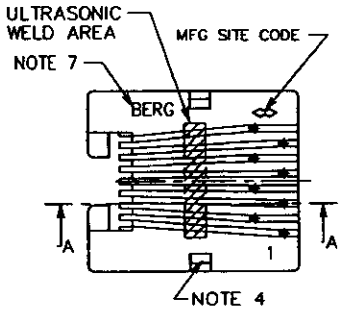

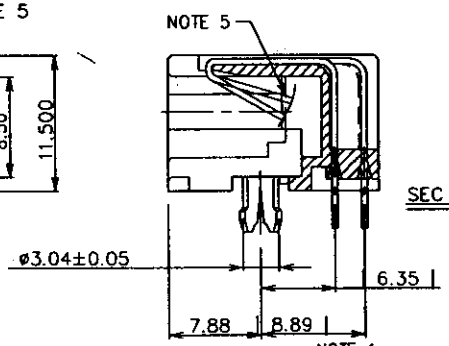

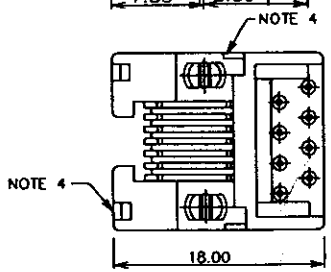

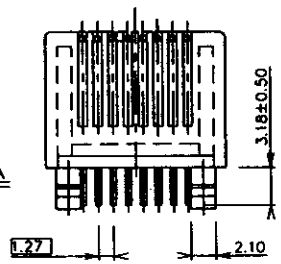

NOTES:

1. RECOMMENDED P.C.B THICKNESS 1.60 MM
2. HOUSING MAT'L: NYLON 66, 25% GLASS REINFORCED, UL94–V0, COLOR : SEE TABLE.
3. CONTACTS: PHOS BRONZE ALLOY UNS–C51000, 0.460DIA. ROUND WIRE. PLATING SEE TABLE.

④ APPEARS ON 8 POS TYPE (P/N 94770–X8X) ONLY.

⑤ PROTRUDED SHELF ONLY APPEARS ON 8–POS JACK.

6. STANDARD PACKAGING METHOD(USE TUBE): SEE GES–14–361.

⑦ COMPANY LOGO CAN BE "BERG" OR "DU PONT", AND WOULD APPEAR IN THE SAME SHIPMENT UNLESS LOGO SPEC HEREIN IS UPDATED.

FIGURE 2– 8 POS TYPE.

mat'l code				tolerance unless otherwise specified			CUSTOMER COPY	BERG ELECTRONICS
rev.	ecn no.	dr	date	linear	.0 ± 0.25			
C					.00 ± 0.13		projection	title LOW PROFILE PCB III HORZ MOD JACK, FOR 1.6MM P.C.B.
					.000± 0.05			
				angles	± 2°			
				dr	DKLIN	04/02/94	unit mm/inch	product family / code TWN
				engr	TONY CHIEN	04/02/94		size A3 / dwg no. 94770
				chr	TONY CHIEN	04/02/94	scale 1/1	sheet 2 OF 2
				appd	JENN TSAO	04/02/94		
sheet index	revision sheet	1						

Tous droits strictement reservés. Reproduction ou communication à des tiers ini sous quelque forme que ce soit sans autorisation écrite du propriétaire. propriété de c BERG ELECTRONICS. Droits de reproduction BERG ELECTRONICS bv

All rights strictly reserved. Reproduction or issue to third parties in any for whatever is not permitted without written authority from the proprietor. Property of c BERG ELECTRONICS. Copyright BERG ELECTRONICS bv