A-Series
Circuit Breaker

Well known for their proven reliability, the A-Series hydraulic/magnetic circuit breakers are compact, temperature stable and designed for precision operation in OEM markets requiring general purpose as well as full load amp applications. The A-Series circuit breakers are offered with ratings from 0.02 to 50 amps, up to 277VAC or 80VDC and are available with several choices of pole configurations, time delays, terminals, with a wide range of standard colors, imprinting and actuator styles.

Actuator styles include handle for 1-6 poles and rocker for 1-3 pole construction. When front panel operation and aesthetics demand a clean, contemporary design, a two-color or solid color Visi-Rocker actuator, indicating either the ON mode or the TRIPPED/OFF mode, is ideally suitable. The new Rockerguard bezel and push-to-reset bezel, which help prevent inadvertent actuation, is also available.

1 POLE - PUSH TO RESET

2 POLE - HANDLE

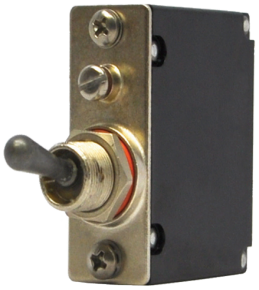

1 POLE - TOGGLE

Features:

- Meets CSA Standard 22.2 No. 100 for the Generator & Welder markets
- Specially constructed version available for applications requiring CE markings

Applications:

- Marine
- Telecommunications
- Military
- Renewable Energy Systems
- Generators & Welder

Agency Certifications:

- UL Recognized – *UL Standard 508, 1077, 1500*
- UL Listed – *UL Standard 489A*
- CSA Accepted
- TUV Certified
- VDE Certified

Carling Technologies®
Innovative Designs. Powerful Solutions.

Carling Technologies, Inc.
60 Johnson Avenue • Plainville, CT 06062-1177
Phone: (860) 793-9281 • Fax: (860) 793-9231
Email: sales@carlingtech.com • www.carlingtech.com

Electrical

Maximum Voltage	277VAC 50/60 Hz, 80VDC
Current Ratings	Standard current coils: 0.100, 0.250, 0.500, 0.750, 1.00, 2.50, 5.00, 7.50, 10.0, 15.0, 20.0, 25.0, 30.0, 35.0, 40.0, 50.0. Other ratings available - consult ordering scheme.
Standard Voltage Coils	DC-6V, 12V; AC-120V, Other ratings available, consult ordering scheme.
Auxiliary Switch Rating	SPDT; 10.1 A - 250VAC, 1.0 A-65VDC/0.5 A - 80 VDC, 0.1A - 125VAC (with gold contacts).
Insulation Resistance	Minimum: 100 Megohms at 500 VDC
Dielectric Strength	UL, CSA - 1500V 60 Hz for one minute between all electrically isolated terminals. A-Series rocker circuit breakers comply with the 8mm spacing & 3750V dielectric requirements from hazardous voltage to operator accessible surfaces per EN 60950 and VDE 0805.
Resistance, Impedance	Values from Line to Load Terminal - based on Series Trip Circuit Breaker.

RESISTANCE PER POLE VALUES
from Line to Load Terminals
(Values Based on Series Trip Circuit Breaker)

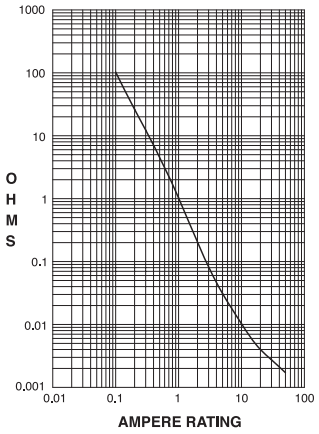

CURRENT (AMPS)	TOLERANCE (%)
0.100 - 5.0	15%
5.1 - 20.0	25%
20.1 - 50.0	35%

Pulse Tolerance Curves

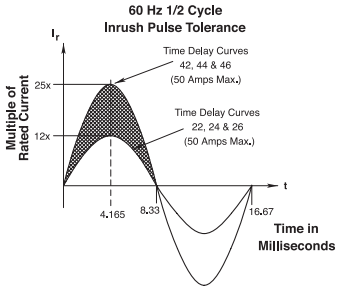

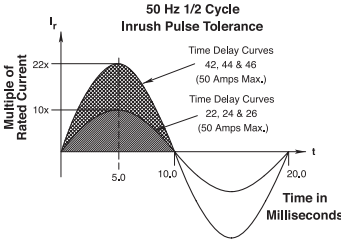

*Manufacturer reserves the right to change product specification without prior notice.

Mechanical

Endurance	6,000 ON-OFF operations @ 6 per minute; with rated Current & Voltage. Additional 4,000 ON-OFF mechanical.
Trip Free	All A-Series Circuit Breakers will trip on overload, even when the actuator is forcibly held in the ON position.
Trip Indication	The operating actuator moves positively to the OFF position when an overload causes the circuit breaker to trip. When mid-trip handle is specified, the handle moves to the mid position on electrical trip of the circuit breaker. When mid-trip handle with alarm switch is specified, the handle moves to the mid position & the alarm switch actuates when the circuit breaker is electrically tripped.

Physical

Number of Poles	1 - 6 Poles (handle) and 1-3 poles (rocker) at 30 Amps or less.
Internal Circuit Config.	Series, (with or without auxiliary switch), Shunt and Relay with current or voltage trip coils, Dual Coil, Switch Only with or without auxiliary switch.
Weight	Approximately 65 grams/pole. (Approximately 2.32 ounces/pole)
Standard Colors	Housing - Black; Actuator- See Ordering Scheme.

Environmental

Designed and tested in accordance with requirements of specification MIL-PRF-55629 & MIL-STD-202 as follows:

Shock	Withstands 100 Gs, 6ms, sawtooth while carrying rated current per Method 213, Test Condition "I". Instantaneous and ultra-short curves tested @ 90% of rated current.
Vibration	Withstands 0.060" excursion from 10-55 Hz, and 10 Gs 55-500 Hz, at rated current per Method 204C, Test Condition A. Instantaneous and ultrashort curves tested at 90% of rated current.
Moisture Resistance	Method 106D; ten 24-hour cycles @ + 25°C to +65°C, 80-98% RH.56 days @ +85°C, 85% RH.
Salt Spray	Method 101, Condition A (90-95% RH @ 5% NaCl Solution, 96 hrs).
Thermal Shock	Method 107D, Condition A (Five cycles @ -55°C to +25°C to +85°C to +25°C).
Operating Temperature	-40°C to +85°C.
Ingress Protection	For Sealed Toggle only. Meets MIL-PRF-55629 Requirements. ±15 PSI when installed in a panel.

Electrical Tables

Table A: Lists UL Recognized & CSA Accepted configurations and performance capabilities as a Component Supplementary Protector.

A -SERIES TABLE A: COMPONENT SUPPLEMENTARY PROTECTORS										
CIRCUIT CONFIGURATION	VOLTAGE			CURRENT RATING		SHORT CIRCUIT CAPACITY (AMPS)		APPLICATION CODES		CONSTRUCTION NOTES
						UL/CSA				
	MAX. RATING	FREQUENCY	PHASE	FULL LOAD AMPS	GENERAL PURPOSE AMPS	WITH BACKUP FUSE	WITHOUT BACKUP FUSE	UL	CSA	
SERIES	32	DC	---	0.02 - 50	---	---	5000	TC1, OL1,U2	TC1, OL1,U2	
	65	DC	---	31 - 50	---	---	7500	TC1,2, OL1,U1	TC1,2, OL1,U1	
	80	DC	---	0.02 - 30	---	---	7500	TC1,2, OL1,U1	TC1,2, OL1,U1	
				---	31 - 50	---	7500	TC1,2, OL0,U1	TC1,2, OL0,U1	
	125	50 / 60	1	0.02 - 30	---	---	3000	TC1, OL1,U2	TC1, OL1,U2	Rocker Version
	125	50 / 60	1	1 - 50	---	---	2000	TC1, OL1,U2	TC1, OL1,U2	
	125	50 / 60	1[4]	1 - 50	---	---	1000	TC1, OL1,U2	TC3, OL1,U3	
	125 / 250	50 / 60	1[3]	0.02 - 30	---	---	3000	TC1,2, OL1,U2	TC1,2, OL1,U2	Rocker Version
	125 / 250	50 / 60	1[3]	0.02 - 50	---	---	3000	TC1,2, OL1,U2	TC1,2, OL1,U2	Handle
	250	50 / 60	1	0.02 - 30	---	---	1500	TC1, OL0,U2	TC1, OL0,U2	Single Pole Break
				0.02 - 30	---	---	3000	TC1, OL1,U2	TC1, OL1,U2	Two Pole Break
				---	31 - 50	---	3000	TC1,2, OL0,U1	TC1,2, OL1,U1	
			1[4]	1 - 50	---	---	1000	TC1, OL1,U2	TC3, OL1,U3	
			3	0.02 - 30	---	5000[2]	---	TC1,2, OL1,C1	TC1,2, OL1,C1	
				31 - 50	---	2000[1]	---	TC1,2, OL1,C1	TC1,2, OL1,C1	
	277	50 / 60	1	0.02 - 30	---	5000[1]	---	TC1,2, OL1,C1	TC1,2, OL1,C1	
DUAL COIL	32	DC	---	0.02 - 50	---	---	5000	TC1, OL1,U2	TC1, OL1,U2	
	65	DC	---	0.02 - 50	---	---	7500	TC1,2, OL1,U1	TC1,2, OL1,U1	
	80	DC	---	0.02 - 30	---	---	7500	TC1,2, OL1,U1	TC1,2, OL1,U1	
				---	31 - 50	---	7500	TC1,2, OL0,U1	TC1,2, OL0,U1	
	125	50 / 60	1	0.02 - 30	---	---	3000	TC1, OL1,U2	TC1, OL1,U2	Rocker Version
				1 - 50	---	---	2000	TC1, OL1,U2	TC1, OL1,U2	
	125	50 / 60	1[4]	1 - 50	---	---	1000	TC1, OL1,U2	TC3, OL1,U3	
	125 / 250	50 / 60	1[3]	0.02 - 30	---	---	3000	TC1,2, OL1,U1	TC1,2, OL1,U1	Rocker Version
	125 / 250	50 / 60	1[3]	0.02 - 50	---	---	3000	TC1,2, OL1,U2	TC1,2, OL1,U2	
	250	50 / 60	1	0.02 - 30	---	---	1500	TC1, OL0,U2	TC1, OL0,U2	Single Pole Break
			1	0.02 - 30	---	---	3000	TC1, OL1,U2	TC1, OL1,U2	Two Pole Break
			1	---	31 - 50	---	3000	TC1,2, OL0,U1	TC1,2, OL0,U1	
			1[4]	1 - 50	---	---	1000	TC1, OL1,U2	TC3, OL1,U3	
			3	0.02 - 30	---	5000[2]	---	TC1,2, OL1,C1	TC1,2, OL1,C1	
				31 - 50	---	2000[1]	---	TC1,2, OL1,C1	TC1,2, OL1,C1	
	277	50 / 60	1	0.02 - 30	---	5000[1]	---	TC1,2, OL1,U1	TC1,2, OL1,U1	
SHUNT	80	DC	---	0.02 - 30	---	---	7500	TC1,2, OL1,U1	TC1,2, OL1,U1	
	125 / 250	50 / 60	1	0.02 - 30	---	---	3000	TC1,2, OL1,U1	TC1,2, OL1,U1	
	250	50 / 60	1	0.02 - 30	---	---	3000	TC1,2, OL1,U1	TC1,2, OL1,U1	
			3	0.02 - 30	---	5000[2]	---	TC1,2, OL1,C1	TC1,2, OL1,C1	
	277	50 / 60	1	0.02 - 30	---	5000[1]	---	TC1,2, OL1,C1	TC1,2, OL1,C1	
RELAY	80	DC	---	0.02 - 30	---	---	7500	TC1,2, OL1,U1	TC1,2, OL1,U1	
	125 / 250	50 / 60	1[3]	0.02 - 30	---	---	3000	TC1,2, OL1,U1	TC1,2, OL1,U1	
	250	50 / 60	1	0.02 - 30	---	---	3000	TC1,2, OL1,U1	TC1,2, OL1,U1	
			3	0.02 - 30	---	5000[2]	---	TC1,2, OL1,C1	TC1,2, OL1,C1	
	277	50 / 60	1	0.02 - 30	---	5000[1]	---	TC1,2, OL1,C1	TC1,2, OL1,C1	
SWITCH ONLY	65	DC	---	0.02 - 50	---					
	80	DC	---	0.02 - 30	---					
	250	50 / 60	1	---	31 - 50					
			3	0.02 - 50	---					
	277	50 / 60	1	0.02 - 30	31 - 50					

Notes:
1 Requires branch circuit backup with a UL LISTED Type K5 or RK5 fuse (15A minimum) at no more than 4 times the rating of the protector.
2 Same as note 1, except that backup fuse is limited to 80 A maximum.
3 2 pole protector required (with one pole per power line) for: 125/250 VAC, 1 pole protector required for : 125 VAC, 1Ø Power System.
4 Meets the requirements of CSA 22.2 No. 100-04 - Motors and Generators.

Electrical Tables

Table B: Lists UL Recognized, CSA Accepted, VDE & TUV Certified configurations & performance capabilities as a Component Supplementary Protector.

A-SERIES TABLE B: COMPONENT SUPPLEMENTARY PROTECTORS

CIRCUIT CONFIGURATION	VOLTAGE			CURRENT RATING		SHORT CIRCUIT CAPACITY (AMPS)						APPLICATION CODES		VDE CONSTRUCTION NOTES
						UL/CSA		VDE		TUV				
	MAX. RATING	FREQUENCY	PHASE	FULL LOAD AMPS	GENERAL PURPOSE AMPS[1]	WITH BACKUP FUSE	WITHOUT BACKUP FUSE	(Inc) WITH BACKUP FUSE	(Icn) WITHOUT BACKUP	(Inc) WITH BACKUP FUSE	(Icn) WITHOUT BACKUP	UL	CSA	
SERIES	65	DC	---	0.10 - 50	—	---	7500	—	---	5000	3000	TC1,2, OL1,U1	TC1,2, OL1,U1	World Market Breaker TUV Only
	80	DC	---	0.10 - 30	—	---	7500	3000	1500	3000	1500	TC1,2, OL1,U1	TC1,2, OL1,U1	Handle Version 1 Pole Only
				31 - 50	31 - 50	---	7500	3000	1500	3000	1500	TC1,2, OL0,U1	TC1,2, OL0,U1	Handle Version 1 Pole Only
				0.10 - 30	—	---	7500	3000	1500	3000	1500	TC1,2, OL1,U1	TC1,2, OL1,U1	Rocker Version 1 - 3 Poles
				31 - 32	—	---	7500	3000	1500	3000	1500	TC1,2, OL1,U1	TC1,2, OL1,U1	Rocker Version 2 Pole Only
				31 - 50	31 - 50	---	7500	3000	1500	3000	1500	TC1,2, OL0,U1	TC1,2, OL0,U1	Rocker Version 1 Pole Only
	250	50 / 60	1	0.10 - 30	—	---	3000	3000	1500	5000	1500	TC1,2, OL1,U1	TC1,2, OL1,U1	Rocker Version 1 - 3 Poles
				31 - 50	31 - 50	---	3000	---	---	5000	1500	TC1,2, OL0,U1	TC1,2, OL0,U1	Rocker Version 1 - 3 Poles
				31 - 32	—	---	3000	6000	1500	5000	1500	TC1,2, OL1,U1	TC1,2, OL1,U1	Rocker Version 2 Pole Only
			1	0.10 - 30	—	---	3000	6000	1500	5000	1500	TC1, OL1,U2	TC1, OL1,U2	Rocker Version 2 Pole Only
			1 [4]	1 - 50	—	---	1000	---	---	5000	1500	TC1, OL1,U2	TC3, OL1,U3	Rocker Version 1 - 3 Poles
			3	0.10 - 30	—	5000 [3]	—	3000	1500	3000	1500	TC1,2, OL1,C1	TC1,2, OL1,C1	Rocker Version 1 - 3 Poles
				31 - 50	—	2000 [2]	—	3000	1500	3000	1500	TC1,2, OL1,C1	TC1,2, OL1,C1	Rocker Version 1 - 3 Poles
DUAL COIL	80	DC	---	0.10 - 30	—	---	7500	3000	1500	3000	1500	TC1,2, OL1,U1	TC1,2, OL1,U1	Rocker Version 1 - 3 Poles
	250	50 / 60	1	0.10 - 30	—	---	3000	3000	1500	5000	1500	TC1,2, OL1,U1	TC1,2, OL1,U1	Rocker Version 1 - 3 Poles
				30 - 50	31 - 50	---	3000	---	---	5000	1500	TC1,2, OL0,U1	TC1,2, OL0,U1	Rocker Version 1 - 3 Poles
			3	0.10 - 30	—	5000 [3]	—	3000	1500	3000	1500	TC1,2, OL1,C1	TC1,2, OL1,C1	Rocker Version 1 - 3 Poles
				31 - 50	—	2000 [2]	—	---	---	3000	1500	TC1,2, OL1,C1	TC1,2, OL1,C1	Rocker Version 1 - 3 Poles
SHUNT	80	DC	---	0.10 - 30	—	---	7500	3000	1500	3000	1500	TC1,2, OL1,U1	TC1,2, OL1,U1	Handle Version 1 Pole Only
				0.10 - 30	—	---	7500	3000	1500	3000	1500	TC1,2, OL1,U1	TC1,2, OL1,U1	Rocker Version 1 - 3 Poles
	250	50 / 60	1	0.10 - 30	—	---	3000	3000	1500	5000	1500	TC1,2, OL1,U1	TC1,2, OL1,U1	Rocker Version 1 - 3 Poles
				30 - 50	31 - 50	---	3000	---	---	5000	1500	TC1,2, OL0,U1	TC1,2, OL0,U1	Rocker Version 1 - 3 Poles
			3	0.10 - 30	—	5000 [3]	—	3000	1500	3000	1500	TC1,2, OL1,C1	TC1,2, OL1,C1	Rocker Version 1 - 3 Poles
				31 - 50	—	2000 [2]	—	---	---	3000	1500	TC1,2, OL1,C1	TC1,2, OL1,C1	Rocker Version 1 - 3 Poles

Notes:
1 General Purpose Ratings for UL/CSA Only.
2 Requires branch circuit backup with a UL LISTED Type K5 or RK5 fuse (15A minimum) at no more than 4 times the rating of the protector.
3 Same as note 2, except that backup fuse is limited to 80 A maximum.
4 Meets the requirements of CSA 22.2 No. 100-04 - Motors and Generators.

Electrical Tables

Table C: Lists UL Recognized, CSA Accepted configurations and performance capabilities as Protectors, Supplementary for Marine Electrical and Fuel Systems (Guide PEQZ2, File E75596). Ignition Protected per UL 1500. UL Classified Small Craft Electrical Devices, Marine in accordance with ISO 8846 (Guide UZMK, File MQ1515) as Marine Supplementary Protectors.

A-SERIES TABLE C: UL1500 (Marine Ignition Protected)							
CIRCUIT CONFIGURATION	VOLTAGE			CURRENT RATING	SHORT CIRCUIT CAPACITY (AMPS)	APPLICATION CODES	
	MAX. RATING	FREQUENCY	PHASE	FULL LOAD AMPS	WITHOUT BACKUP FUSE	UL	CSA
SERIES	14 [1]	DC	---	0.02 - 50	5000	TC1,OL1,U1	TC1,OL1,U1
	32 [1]	DC	---	0.02 - 50	5000	TC1,OL1,U2	TC1,OL1,U2
	65	DC	---	0.02 - 50	3000	TC1,OL1,U1	TC1,OL1,U1
	125	50 / 60	1	0.02 - 50	3000	TC1,OL1,U2	TC1,OL1,U2
	125 / 250	50 / 60	1 [2]	0.02 - 50	3000	TC1,OL1,U2	TC1,OL1,U2
	250	50 / 60	1	0.02 - 30	1500	TC1,OL1,U1	TC1,OL1,U1

Notes:
1 Available with special catalog number only (consult factory).
2 2 pole protector required (with one per power line) for 125 / 250 VAC. 1 pole protector required for 125 VAC 1 phase power system

Table D: Lists UL Listed configurations and performance capabilities as Circuit Breakers for use in Communications Equipment (Guide DITT, File E189195), under UL489A.

A-SERIES TABLE D: UL489A (COMMUNICATIONS EQUIPMENT)				
CIRCUIT CONFIGURATION	VOLTAGE		CURRENT RATING	INTERRUPTING CAPACITY (AMPS)
	MAX. RATING	FREQUENCY	GENERAL PURPOSE AMPS	WITHOUT BACKUP FUSE
SERIES	80	DC	0.10 - 50	5000
	80	DC	60 - 90 [1]	5000

Notes:
1 Parallel Pole Construction

Agency Certifications

UL Recognized

UL Standard 1077 — Component Recognition Program as Protectors Supplementary (Guide CCN/QVNU2, File E75596)

UL Standard 508 — Switches, Industrial Control (Guide CCN/NRNT2, File E148683)

UL Standard 1500 — Protectors, Supplementary for Marine Electrical & Fuel Systems (Guide PEQZ2, File E75596) Ignition Protection

UL Listed

UL Standard 489A — Communications Equipment (Guide CCN/DITT, File E189195)

CSA Accepted

Component Supplementary Protector under Class 3215 30, File 047848 0 000 CSA Standard C22.2 No. 235

TUV Certified

EN60934, under License No. R72040875

VDE Certified

EN60934, VDE 0642 under File No. 10537

A	A	3	–	B	0	–	10	–	450	–	1	B	1	–	C
1 Series	2 Actuator	3 Poles		4 Circuit	5 Aux/Alarm Switch		6 Frequency & Delay		7 Current Rating		8 Terminal	9 Actuator Color	10 Mounting/ Barriers		11 Agency Approval

1 SERIES
A

2 ACTUATOR[1]

A	Handle, one per pole
B	Handle, one per multipole unit
S	Mid-Trip Handle, one per pole
T	Mid-Trip Handle, one per pole & Alarm Switch

3 POLES

1	One	**3**	Three	**5**	Five
2	Two	**4**	Four	**6**	Six

4 CIRCUIT

A[2]	Switch Only (No Coil)	**F**[3]	Relay Trip (Current)
B	Series Trip (Current)	**G**[3]	Relay Trip (Voltage)
C	Series Trip (Voltage)	**H**[3,4]	Dual Coil with Shunt Trip Voltage Coil
D[3]	Shunt Trip (Current)	**K**[3,4]	Dual Coil with Relay Trip Voltage Coil
E[3]	Shunt Trip (Voltage)		

5 AUXILIARY/ALARM SWITCH[5]

0	w/o Aux Switch	**5**	S.P.S.T., 0.093 Q.C. Term. (Gold Contacts)
1	S.P.D.T., 0.093 Q.C. Term.	**6**	S.P.S.T., 0.139 Solder Lug
2	S.P.D.T., 0.110 Q.C. Term.	**7**	S.P.S.T., 0.110 Q.C. Term. (Gold Contacts)
3	S.P.D.T., 0.139 Solder Lug	**8**	S.P.S.T., 0.187 Q.C. Term.
4	S.P.D.T., 0.110 Q.C. Term. (Gold Contacts)	**9**	S.P.D.T., 0.187 Q.C. Term.

6 FREQUENCY & DELAY

03	DC 50/60Hz, Switch Only	**30**	DC, 50/60Hz Instantaneous
10	DC Instantaneous	**31**	DC, 50/60Hz Ultra Short
11	DC Ultra Short	**32**	DC, 50/60Hz Short
12	DC Short	**34**	DC, 50/60Hz Medium
14	DC Medium	**36**	DC, 50/60Hz Long
16	DC Long	**42**[7]	50/60Hz Short, Hi-Inrush
20	50/60Hz Instantaneous	**44**[7]	50/60Hz Medium, Hi-Inrush
21	50/60Hz Ultra Short	**46**[7]	50/60Hz Long, Hi-Inrush
22	50/60Hz Short	**52**[7]	DC, Short,Hi-Inrush
24	50/60Hz Medium	**54**[7]	DC, Medium, Hi-Inrush
26	50/60Hz Long	**56**[7]	DC, Long, Hi-Inrush

Notes:

1 Actuator Code:
A: Handle tie pin spacer(s) and retainers provided unassembled with multi-pole units.
B: Handle location as viewed from front of breaker:
2 pole - left pole 3 pole - center pole 4 pole - two handles at center poles
5 pole - three handles at center poles 6 pole - four handles at center poles
S: Handle moves to mid-position only upon electrical trip of the breaker. Available with circuit codes B, C, D, E, F, G, H and K.
T: Handle moves to mid-position and alarm switch activates only upon electrical trip of the breaker. Available with circuit codes B & C.

2 Switch Only circuits, rated up to 50 amps and 6 poles, and only available when tied to a protected pole (Circuit Code B, C, D or H.), For .02 to 30 amps, select Current Code 630. For 35 - 50 amps, select Current Code 650.

3 Available with terminal Codes 1, 2 and 3. Current Rating limited to 50A amps maximum.

4 Consult factory for available Dual Coil options, as special catalog number is required. With Shunt construction, Dual Coils will trip instantaneously on line voltage. Dual coils require 30VA minimum power to trip and are rated for intermittent duty only.

5 Auxiliary Switch breakers with Series Trip & Switch Only circuits: ≤ 30A - supplied with standard half shells. 35-50A - supplied with extended boat (B-Style) half shells. On multi-pole breakers, one auxilary switch is supplied, mounted in the extreme right pole.

6 Separate pole type voltage coils not rated for continuous duty. Available only with delay codes 10 and 20.

7 Available with Circuit Codes B & D only. VDE Certified to 30 amps. UL Recognized, CSA Accepted & TUV Certified to 50 amps.

8 VDE Certification available with single pole breakers with DC Delay only. UL Recognition and CSA Accepted available in one and two pole breakers.

9 Screw Terminals are recommended on ratings greater than 20 amps. Ratings over 30 amps are only available with Terminal Codes 5, 9, G, H, M and Q..

10 Terminal Code 1: VDE Certification up to 25 amps and UL Recognition and CSA Certification up to 30 amps, but not recommended over 20 amps.

11 Terminal Codes 3, 5, E and H (Bus Type) with VDE, are supplied with Lock Washers, and Terminal Code M (M6 Threaded Stud) with VDE is supplied with Lock and Flat Washers. These breakers are only VDE Certified when the washers are used.

12 Terminal Code L: VDE Certified available up to 12A. UL Recognized & CSA Accepted available up to 30A.

13 Single pole breakers with Terminal Code P (Printed Circuit Board) are available up to 30 amps with VDE Certification and 50 amps with UL Recognition and CSA Accepted, with Circuit Codes A, B and C. Two pole breakers with Terminal Code P (Printed Circuit Board) are available up to 40 amps with UL Recognition and CSA Accepted with Circuit Codes A, B and C.

14 Terminal Code Q not available with VDE certification.

15 Single pole only.

7 CURRENT RATING (AMPERES)

CODE	AMPERES						
020	0.020	**225**	0.250	**420**	2.000	**611**	11.000
025	0.025	**230**	0.300	**522**	2.250	**711**	11.500
030	0.030	**235**	0.350	**527**	2.750	**612**	12.000
035	0.035	**240**	0.400	**430**	3.000	**712**	12.500
040	0.040	**245**	0.450	**435**	3.500	**613**	13.000
045	0.045	**250**	0.500	**440**	4.000	**614**	14.000
050	0.050	**255**	0.550	**445**	4.500	**615**	15.000
055	0.055	**260**	0.600	**450**	5.000	**616**	16.000
060	0.060	**265**	0.650	**455**	5.500	**617**	17.000
065	0.065	**270**	0.700	**460**	6.000	**618**	18.000
070	0.070	**275**	0.750	**465**	6.500	**620**	20.000
075	0.075	**280**	0.800	**470**	7.000	**622**	22.000
080	0.080	**285**	0.850	**475**	7.500	**624**	24.000
085	0.085	**290**	0.900	**480**	8.000	**625**	25.000
090	0.090	**295**	0.950	**485**	8.500	**630**	30.000
095	0.095	**410**	1.000	**490**	9.000	**635**[8]	35.000
210	0.100	**512**	1.250	**495**	9.500	**640**[8]	40.000
215	0.150	**415**	1.500	**610**	10.000	**645**[8]	45.000
220	0.200	**517**	1.750	**710**	10.500	**650**[8]	50.000

OR VOLTAGE COIL (NORMAL RATED VOLTAGE)[6]

CODE	AMPERES						
A06	6 DC	**A32**	32 DC	**J12**	12 AC	**J65**	65 AC
A12	12 DC	**A48**	48 DC	**J18**	18 AC	**K20**	120 AC
A18	18 DC	**A65**	65 DC	**J24**	24 AC	**L40**	240 AC
A24	24 DC	**J06**	6 AC	**J48**	48 AC		

8 TERMINAL[9]

1[10]	Push-On 0.250 Tab (Q.C.)	**E**[11]	Screw M4 (Bus Type)
2	Screw 8-32 w/upturned lugs	**F**	Screw M5 w/upturned lugs and 30° bend
3[11]	Screw 8-32 (Bus Type)	**G**	Screw M5 (Bus Type) and 30° bend
4	Screw 10-32 w/upturned lugs	**H**[11]	Screw M5 (Bus Type)
5[11]	Screw 10-32 (Bus Type)	**L**[12]	0.250 Q.C./ Solder Lug
6	Screw 8-32 w/upturned lugs and 30° bend	**M**[11]	M6 Threaded Stud
7	Screw 8-32 (Bus Type) and 30° bend	**Q**[14]	Push-In Stud
8	Screw 10-32 w/upturned lugs and 30° bend	**R**	Screw M4 w/upturned lugs and 30° bend
9	Screw 10-32 (Bus Type) and 30° bend	**T**[11]	Screw M4 (Bus Type) and 30° bend
B	Screw M5 w/upturned lugs	**P**[13]	Printed Circuit Board Terminals
C	Screw M4 w/upturned lugs	**S**[13]	Push-On 0.110 Tab (Q.C.)

9 ACTUATOR COLOR & LEGEND

Acuator Color	I-O	ON-OFF	Dual	Legend Color
White	**A**	**B**	**1**	Black
Black	**C**	**D**	**2**	White
Red	**F**	**G**	**3**	White
Green	**H**	**J**	**4**	White
Blue	**K**	**L**	**5**	White
Yellow	**M**	**N**	**6**	Black
Gray	**P**	**Q**	**7**	Black
Orange	**R**	**S**	**8**	Black
Black (short handle)[15]	**T**	**U**	**9**	White

10 MOUNTING/BARRIERS

	MOUNTING STYLE	BARRIERS
	Threaded Insert, 2 per pole	
1	6-32 x 0.195 inches	no
A	6-32 x 0.195 inches	yes
2	ISO M3 x 5mm	no
B	ISO M3 x 5mm (multipole only)	yes
	Front panel Snap-In, 0.75" wide bezel	
5	without Handleguard	no
6	without Handleguard (multipole only)	yes
	Front panel Snap-In, 0.96" wide bezel	
7	without Handleguard, 1-pole 0.96" wide; multipole units have .105" bezel overhang on all sides	no
8	without Handleguard, 1-pole 0.96" wide; (multipole only) .105" bezel overhang on all sides	yes

11 AGENCY APPROVAL

C	UL Recognized & CSA Accepted
D	VDE Certified, UL Recognized & CSA Accepted
E	TUV Certified, UL Recognized & CSA Accepted
I	UL Rec. STD 1077, UL Rec. 1500 (ignition protected), & CSA Accepted

A	A	1	—	B	0	—	14	—	450	—	1	B	1	—	M	T
1 Series	2 Actuator	3 Poles		4 Circuit	5 Aux/Alarm Switch		6 Frequency & Delay		7 Current Rating		8 Terminal	9 Actuator Color	10 Mounting/ Barriers		11 Max. Appl. Rating	12 Agency Approval

1 SERIES
A

2 ACTUATOR[1]
A Handle, one per pole
S Mid-Trip Handle, one per pole
T Mid-Trip Handle, one per pole & Alarm Switch

3 POLES[2]
1 One
2 Two
3 Three
4 Four

4 CIRCUIT
B Series Trip (Current)

5 AUXILIARY/ALARM SWITCH[2]
0 w/o Aux Switch
1 S.P.D.T., 0.093 Q.C. Term.
2 S.P.D.T., 0.110 Q.C. Term.
3 S.P.D.T., 0.139 Solder Lug
7 S.P.S.T., 0.110 Q.C. Term. (Gold Contacts)
8 S.P.S.T., 0.187 Q.C. Term.
9 S.P.D.T., 0.187 Q.C. Term.

6 FREQUENCY & DELAY
11 DC Ultra Short
12 DC Short
14 DC Medium
16 DC Long
52[3] DC, Short,Hi-Inrush
54[3] DC, Medium, Hi-Inrush
56[3] DC, Long, Hi-Inrush

7 CURRENT RATING (AMPERES)

CODE	AMPERES						
210	0.100	**285**	0.850	**455**	5.500	**613**	13.000
215	0.150	**290**	0.900	**460**	6.000	**614**	14.000
220	0.200	**295**	0.950	**465**	6.500	**615**	15.000
225	0.250	**410**	1.000	**470**	7.000	**616**	16.000
230	0.300	**512**	1.250	**475**	7.500	**617**	17.000
235	0.350	**415**	1.500	**480**	8.000	**618**	18.000
240	0.400	**517**	1.750	**485**	8.500	**620**	20.000
245	0.450	**420**	2.000	**490**	9.000	**622**	22.000
250	0.500	**522**	2.250	**495**	9.500	**624**	24.000
255	0.550	**527**	2.750	**610**	10.000	**625**	25.000
260	0.600	**430**	3.000	**710**	10.500	**630**	30.000
265	0.650	**435**	3.500	**611**	11.000	**635**[3]	35.000
270	0.700	**440**	4.000	**711**	11.500	**640**[3]	40.000
275	0.750	**445**	4.500	**612**	12.000	**645**[3]	45.000
280	0.800	**450**	5.000	**712**	12.500	**650**[3]	50.000

8 TERMINAL[5]
1[6] Push-On 0.250 Tab (Q.C.)
2 Screw 8-32 w/upturned lugs
3[7] Screw 8-32 (Bus Type)
4 Screw 10-32 w/upturned lugs
5[7] Screw 10-32 (Bus Type)
6 Screw 8-32 w/upturned lugs and 30° bend
7 Screw 8-32 (Bus Type) and 30° bend
8 Screw 10-32 w/upturned lugs and 30° bend
9 Screw 10-32 (Bus Type) and 30° bend
B Screw M5 w/upturned lugs
F Screw M5 w/upturned lugs and 30° bend
G Screw M5 (Bus Type) and 30° bend
H Screw M5 (Bus Type)
M[7] M6 Threaded Stud
P[8] Printed Circuit Board Terminals
Q[9] Push-In Stud

9 ACTUATOR COLOR & LEGEND

Acuator Color	I-O	Dual	Legend Color
White	**B**	**1**	Black
Black	**D**	**2**	White
Red	**G**	**3**	White
Green	**J**	**4**	White
Blue	**L**	**5**	White
Yellow	**N**	**6**	Black
Gray	**Q**	**7**	Black
Orange	**S**	**8**	Black
Black (short handle)[10]	**U**	**9**	White

10 MOUNTING/BARRIERS

	MOUNTING STYLE	BARRIERS
	Threaded Insert, 2 per pole	
1	6-32 x 0.195 inches	no
A	6-32 x 0.195 inches	yes
2	ISO M3 x 5mm	no
B	ISO M3 x 5mm (multipole only)	yes
	Front panel Snap-In, 0.75" wide bezel	
5	without Handleguard	no
6	without Handleguard (multipole only)	yes
	Front panel Snap-In, 0.96" wide bezel	
7	without Handleguard, 1-pole 0.96" wide; multipole units have .105" bezel overhang on all sides	no
8	without Handleguard, 1-pole 0.96" wide; (multipole only) .105" bezel overhang on all sides	yes

11 MAXIMUM APPLICATION RATING
M 80 DC

12 AGENCY APPROVAL
T UL489A LISTED
K UL489A LISTED, VDE CERTIFIED
J UL489A LISTED, TUV CERTIFIED

Notes:
1 Actuator Code:
A: Handle tie pin spacer(s) and retainers provided unassembled with multi-pole units.
S: Handle moves to mid-position only upon electrical trip of the breaker.
T: Handle moves to mid-position and alarm switch activates only upon electrical trip of the breaker.
2 On multi-pole breakers, one auxiliary switch is supplied, mounted in the extreme right pole.
3 VDE Certified to 30 amps. UL489A Listed to 50 amps.
4 VDE Certification available with single pole breakers only. UL489A Listing available with one and two pole breakers.
5 Screw Terminals are recommended on ratings greater than 20 amps. Ratings over 30 amps are only available with Terminal Codes 5, 9 G, H, M and Q.
6 Terminal Code 1 (Push-On) available up to 25 amps with VDE Certification and 30 amps with UL489A Listing, but is not recommended over 20 amps.
7 Terminal Codes 3, 5 and H (Bus Type) with VDE, are supplied with Lock Washers, and Terminal Code M (M6 Threaded Stud) with VDE is supplied with Lock and Flat Washers. These breakers are only VDE Certified when the washers are used.
8 Single pole breakers with Terminal Code P (Printed Circuit Board) are available up to 30 amps with VDE Certification and 50 amps with UL489A Listing.
9 Terminal Code Q not available with VDE certification.
10 Single pole only.

A	A	3	—	B	0	—	14	—	450	—	1	A	1	—	P
1 Series	2 Actuator	3 Poles		4 Circuit	5 Aux/Alarm Switch		6 Frequency & Delay		7 Current Rating		8 Terminal	9 Actuator Color	10 Mounting/ Barriers		11 Agency Approval

1 SERIES
A

2 ACTUATOR[1]
A Handle, one per pole
B Handle, one per multi-pole unit
S Mid-Trip Handle, one per pole
T Mid-Trip Handle, one per pole & Alarm Switch

3 POLES
1 One
2 Two
3 Three
4 Four
5 Five
6 Six

4 CIRCUIT
A[2] Switch Only (No Coil)
B Series Trip (Current)
C Series Trip (Voltage)
D[3] Shunt Trip (Current)
E[3] Shunt Trip (Voltage)
H[3,4] Dual Coil with Shunt Trip Voltage Coil

5 AUXILIARY/ALARM SWITCH[5]
0 w/o Aux Switch
2 S.P.D.T., 0.110 Q.C. Term.
3 S.P.D.T., 0.139 Solder Lug
4 S.P.D.T., 0.110 Q.C. Term. (Gold Contacts)

6 FREQUENCY & DELAY
03 DC 50/60Hz, Switch Only
10 DC Instantaneous
11 DC Ultra Short
12 DC Short
14 DC Medium
16 DC Long
20 50/60Hz Instantaneous
21 50/60Hz Ultra Short
22 50/60Hz Short
24 50/60Hz Medium
26 50/60Hz Long
30 DC, 50/60Hz Instantaneous
31 DC, 50/60Hz Ultra Short
32 DC, 50/60Hz Short
34 DC, 50/60Hz Medium
36 DC, 50/60Hz Long
42[7] 50/60Hz Short, Hi-Inrush
44[7] 50/60Hz Medium, Hi-Inrush
46[7] 50/60Hz Long, Hi-Inrush
52[7] DC, Short,Hi-Inrush
54[7] DC, Medium, Hi-Inrush
56[7] DC, Long, Hi-Inrush

7 CURRENT RATING (AMPERES)

CODE	AMPERES	CODE	AMPERES	CODE	AMPERES	CODE	AMPERES
210	0.100	**285**	0.850	**455**	5.500	**613**	13.000
215	0.150	**290**	0.900	**460**	6.000	**614**	14.000
220	0.200	**295**	0.950	**465**	6.500	**615**	15.000
225	0.250	**410**	1.000	**470**	7.000	**616**	16.000
230	0.300	**512**	1.250	**475**	7.500	**617**	17.000
235	0.350	**415**	1.500	**480**	8.000	**618**	18.000
240	0.400	**517**	1.750	**485**	8.500	**620**	20.000
245	0.450	**420**	2.000	**490**	9.000	**622**	22.000
250	0.500	**522**	2.250	**495**	9.500	**624**	24.000
255	0.550	**527**	2.750	**610**	10.000	**625**	25.000
260	0.600	**430**	3.000	**710**	10.500	**630**	30.000
265	0.650	**435**	3.500	**611**	11.000	**635**[8]	35.000
270	0.700	**440**	4.000	**711**	11.500	**640**[8]	40.000
275	0.750	**445**	4.500	**612**	12.000	**645**[8]	45.000
280	0.800	**450**	5.000	**712**	12.500	**650**[8]	50.000

OR VOLTAGE COIL (NORMAL RATED VOLTAGE)[6]

CODE	AMPERES	CODE	AMPERES	CODE	AMPERES	CODE	AMPERES
A06	6 DC	**A32**	32 DC	**J12**	12 AC	**J65**	65 AC
A12	12 DC	**A48**	48 DC	**J18**	18 AC	**K20**	120 AC
A18	18 DC	**A65**	65 DC	**J24**	24 AC	**L40**	240 AC
A24	24 DC	**J06**	6 AC	**J48**	48 AC		

8 TERMINAL[9]
1[10] Push-On 0.250 Tab (Q.C.)
2 Screw 8-32 w/upturned lugs
3[11] Screw 8-32 (Bus Type)
4 Screw 10-32 w/upturned lugs
5[11] Screw 10-32 (Bus Type)
6 Screw 8-32 w/upturned lugs and 30° bend
7 Screw 8-32 (Bus Type) and 30° bend
8 Screw 10-32 w/upturned lugs and 30° bend
9 Screw 10-32 (Bus Type) and 30° bend
B Screw M5 w/upturned lugs
C Screw M4 w/upturned lugs
E[11] Screw M4 (Bus Type)
F Screw M5 w/upturned lugs and 30° bend
G Screw M5 (Bus Type) and 30° bend
H[11] Screw M5 (Bus Type)
R Screw M4 w/upturned lugs and 30° bend
T[11] Screw M4 (Bus Type) and 30° bend

9 ACTUATOR COLOR & LEGEND

Acuator Color	I-O	Dual	Legend Color
White	**A**	**1**	Black
Black	**C**	**2**	White
Red	**F**	**3**	White
Green	**H**	**4**	White
Blue	**K**	**5**	White
Yellow	**M**	**6**	Black
Gray	**P**	**7**	Black
Orange	**R**	**8**	Black

10 MOUNTING/BARRIERS

	MOUNTING STYLE	BARRIERS
	Threaded Insert, 2 per pole	
1	6-32 x 0.195 inches	no
A	6-32 x 0.195 inches	yes
2	ISO M3 x 5mm	no
B	ISO M3 x 5mm (multipole only)	yes
	Front panel Snap-In, 0.75" wide bezel	
5	without Handleguard	no
6	without Handleguard (multipole only)	yes
	Front panel Snap-In, 0.96" wide bezel	
7	without Handleguard, 1-pole 0.96" wide; multipole units have .105" bezel overhang on all sides	no
8	without Handleguard, 1-pole 0.96" wide; (multipole only) .105" bezel overhang on all sides	yes

11 AGENCY APPROVAL
P TUV Certified, UL Recognized & CSA Accepted
Q UL Rec. STD 1077, UL Rec. 1500 (ignition protected), & CSA Accepted

Notes:
1 Actuator Code:
A: Handle tie pin spacer(s) and retainers provided unassembled with multi-pole units.
S: Handle moves to mid-position only upon electrical trip of the breaker. Available with circuit codes B, C, D, E, and H.
T: Handle moves to mid-position and alarm switch activates only upon electrical trip of the breaker. Available with circuit codes B & C.
2 Switch Only circuits, rated up to 50 amps and 6 poles, and only available when tied to a protected pole (Circuit Code B, C, D or H.), For .01 to 30 amps, select Current Code 630. For 35 - 50 amps, select Current Code 650.
3 Available with terminal Codes 1, 2 and 3. Current Rating limited to 30 amps maximum.
4 Consult factory for available Dual Coil options, as special catalog number is required. With Shunt construction, Dual Coils will trip instantaneously on line voltage. Dual coils require 30VA minimum power to trip and are rated for intermittent duty only.
5 On multi-pole breakers, one auxilary switch is supplied, mounted in the extreme right pole.
6 Separate pole type voltage coils not rated for continuous duty. Available only with delay codes 10, 20 & 30.
7 Available with Circuit Codes B & D only. VDE Certified to 30 amps. UL Recognized, CSA Accepted & TUV Certified to 50 amps.
8 Available up to two poles with AC or DC delays.
9 Screw Terminals are recommended on ratings greater than 20 amps. Ratings over 30 amps are only available with Terminal Codes 5, 9, G and H.
10 Terminal Code 1: TUV Certification up to 30 amps, but not recommended over 20 amps.
11 Terminal Codes 3, 5 , 7, 9, E, G and H (Bus Type) are supplied with Lock Washers. These breakers are only TUV Certified when the washers are used.

A	F	1	–	B	0	–	14	–	450	–	1	3	1	–	M	T
1 Series	2 Actuator	3 Poles		4 Circuit	5 Aux/Alarm Switch		6 Frequency & Delay		7 Current Rating		8 Terminal	9 Actuator Color	10 Mounting/ Barriers		11 Max. Appl. Rating	12 Agency Approval

1 SERIES
A

2 ACTUATOR[1]

Two Color Visi-Rocker
- **C** Indicate ON, vertical legend
- **D** Indicate ON, horizontal legend
- **F** Indicate OFF, vertical legend
- **G** Indicate OFF, horizontal legend

Single color
- **J** Vertical legend
- **K** Horizontal legend

Push-To-Reset, Visi-Rocker
- **N** Indicate OFF, vertical legend
- **O** Indicate OFF, horizontal legend

Push-To-Reset , Single color
- **R** Vertical legend
- **U** Horizontal legend

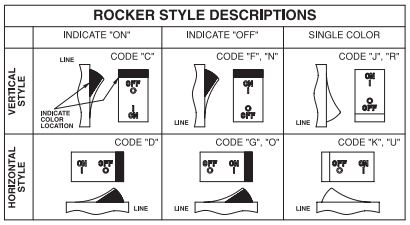

3 POLES[2]
- **1** One
- **2** Two
- **3** Three

4 CIRCUIT
- **B** Series Trip (Current)

5 AUXILIARY/ALARM SWITCH[3]
- **0** w/o Aux Switch
- **1** S.P.D.T., 0.093 Q.C. Term.
- **2** S.P.D.T., 0.110 Q.C. Term.
- **3** S.P.D.T., 0.139 Solder Lug
- **7** S.P.S.T., 0.110 Q.C. Term. (Gold Contacts)
- **8** S.P.S.T., 0.187 Q.C. Term.
- **9** S.P.D.T., 0.187 Q.C. Term.

6 FREQUENCY & DELAY
- **11** DC Ultra Short
- **12** DC Short
- **14** DC Medium
- **16** DC Long
- **52** DC, Short,Hi-Inrush
- **54** DC, Medium, Hi-Inrush
- **56** DC, Long, Hi-Inrush

7 CURRENT RATING (AMPERES)

CODE	AMPERES						
210	0.100	**285**	0.850	**455**	5.500	**613**	13.000
215	0.150	**290**	0.900	**460**	6.000	**614**	14.000
220	0.200	**295**	0.950	**465**	6.500	**615**	15.000
225	0.250	**410**	1.000	**470**	7.000	**616**	16.000
230	0.300	**512**	1.250	**475**	7.500	**617**	17.000
235	0.350	**415**	1.500	**480**	8.000	**618**	18.000
240	0.400	**517**	1.750	**485**	8.500	**620**	20.000
245	0.450	**420**	2.000	**490**	9.000	**622**	22.000
250	0.500	**522**	2.250	**495**	9.500	**624**	24.000
255	0.550	**527**	2.750	**610**	10.000	**625**	25.000
260	0.600	**430**	3.000	**710**	10.500	**630**	30.000
265	0.650	**435**	3.500	**611**	11.000	**635**[4]	35.000
270	0.700	**440**	4.000	**711**	11.500	**640**[4]	40.000
275	0.750	**445**	4.500	**612**	12.000	**645**[4]	45.000
280	0.800	**450**	5.000	**712**	12.500	**650**[4]	50.000

8 TERMINAL[5]
- **1**[6] Push-On 0.250 Tab (Q.C.)
- **2** Screw 8-32 w/upturned lugs
- **3**[7] Screw 8-32 (Bus Type)
- **4** Screw 10-32 w/upturned lugs
- **5**[7] Screw 10-32 (Bus Type)
- **6** Screw 8-32 w/upturned lugs and 30° bend
- **7** Screw 8-32 (Bus Type) and 30° bend
- **8** Screw 10-32 w/upturned lugs and 30° bend
- **9** Screw 10-32 (Bus Type) and 30° bend
- **B** Screw M5 w/upturned lugs
- **F** Screw M5 w/upturned lugs and 30° bend
- **G** Screw M5 (Bus Type) and 30° bend
- **H** Screw M5 (Bus Type)
- **M**[7] M6 Threaded Stud
- **P**[8] Printed Circuit Board Terminals
- **Q**[9] Push-In Stud

9 ACTUATOR COLOR & LEGEND

Actuator or Visi-Color[10]	Marking: ON-OFF	Marking: Dual[10]	Marking Color: Single Color	Marking Color: Visi-Rocker
White	**B**	**1**	Black	White
Black	**D**	**2**	White	n/a
Red	**G**	**3**	White	Red
Green	**J**	**4**	White	Green
Blue	**L**	**5**	White	Blue
Yellow	**N**	**6**	Black	Yellow
Gray	**Q**	**7**	Black	Gray
Orange	**S**	**8**	Black	Orange

10 MOUNTING/BARRIERS[11]

	STANDARD ROCKER BEZEL	BARRIERS
	Threaded Insert, 2 per pole	
1	6-32 x 0.195 inches	no
A	6-32 X 0.195 inches (multi-pole units only)	yes
2	ISO M3 x 5mm	no
B	ISO M3 x 5mm (multi-pole units only)	yes
	ROCKERGUARD & PUSH-TO-RESET BEZEL	
	Threaded Insert, 2 per pole	
3	6-32 x 0.195 inches	no
C	6-32 x 0.195 inches (multi-pole units only)	yes
4	ISO M3 x 5mm	no
D	ISO M3 x 5mm (multi-pole units only)	yes
	FRONT PANEL SNAP-IN BRACKET, 0.744" [18.90mm] wide bezel	
8	without Rockerguard (single pole units only)	no
H	with Rockerguard (single pole units only)	no
	FRONT PANEL SNAP-IN BRACKET, 0.96" [24.48mm] wide bezel	
9	without Rockerguard (single pole units only)	no
J	with Rockerguard (single pole units only)	no

11 MAXIMUM APPLICATION RATING
- **M** 80 DC

12 AGENCY APPROVAL
- **T** UL489A LISTED
- **K** UL489A LISTED, VDE CERTIFIED
- **J** UL489A LISTED, TUV CERTIFIED

Notes:
1. Push-To-Reset actuators have OFF portion of rocker shrouded.
2. Multi-pole breakers have all breakers identical except when specifying Aux. switch and/or mixed poles, and have one rocker per breaker.
3. Auxiliary Switch breakers with Series Trip circuits: ≤ 30A, are supplied with standard half shells. 30-50A are supplied with extended boat (B-Style) half shells.
4. VDE Certification available with single pole breakers only. UL489A Listing available with one and two pole breakers.
5. Screw Terminals are recommended on ratings greater than 20 amps. Ratings over 30 amps are only available with Terminal Codes 5, 9, G, H, M and Q.
6. Terminal Code 1 (Push-On) available up to 25 amps with TUV or VDE Certification and 30 amps with UL489A Listing, but is not recommended over 20 amps.
7. Terminal Codes 3, 5 and H (Bus Type) with TUV or VDE, are supplied with Lock Washers, and Terminal Code M (M6 Threaded Stud) with VDE is supplied with Lock and Flat Washers. These breakers are only TUV or VDE Certified when the washers are used.
8. Single pole breakers with Terminal Code P (Printed Circuit Board) are available up to 30 amps with VDE Certification and 50 amps with UL489A Listing.
9. Terminal Code Q not available with VDE certification.
10. Color shown is Visi and Legend with remainder of rocker black. Dual = ON-OFF/I-O legend.
11. Legend on Push-to-reset bezel/shroud is white with single color actuator codes R & U. Legend on Push-To-Reset bezel/shroud matches Visi-Color of rocker with actuator codes N & O. Rockerguard available with actuator codes C through K

CIRCUIT BREAKER PROFILE	CIRCUIT SCHEMATIC ANSI SWITCH ONLY (NO COIL)	CIRCUIT CODE	AUX SWITCH CODE	CIRCUIT SCHEMATIC ANSI SERIES TRIP	CIRCUIT CODE	AUX SWITCH CODE
2 TERMINALS 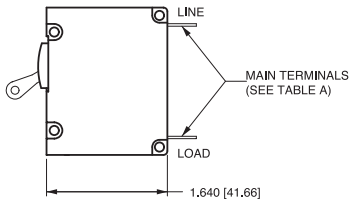	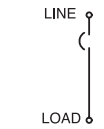	A	0		BC	0
5 TERMINALS 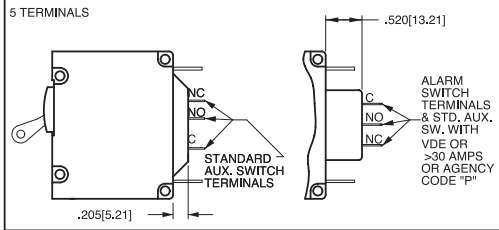	SWITCH ONLY (NO COIL) WITH AUXILIARY SWITCH 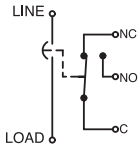	A	1 2 3 4	SERIES TRIP WITH (3) AUXILIARY/ALARM SWITCH 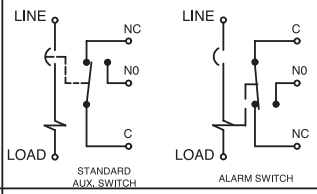	BC	1 2 3 4
3 TERMINALS 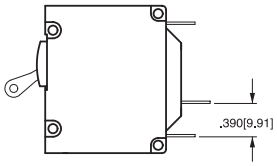	SHUNT TRIP 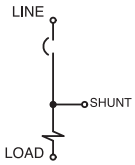	DE	0	DUAL COIL; SERIES TRIP CURRENT COIL, SHUNT TRIP VOLTAGE COIL 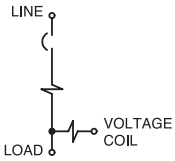	H	0
4 TERMINALS 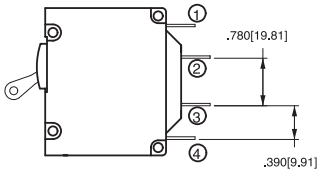	RELAY TRIP 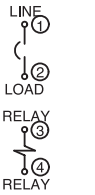	FG	0	DUAL COIL; SERIES TRIP CURRENT COIL, RELAY TRIP VOLTAGE COIL 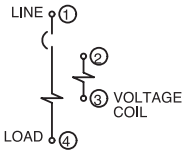	K	0

AUXILIARY/ALARM SWITCH TERMINAL DETAIL

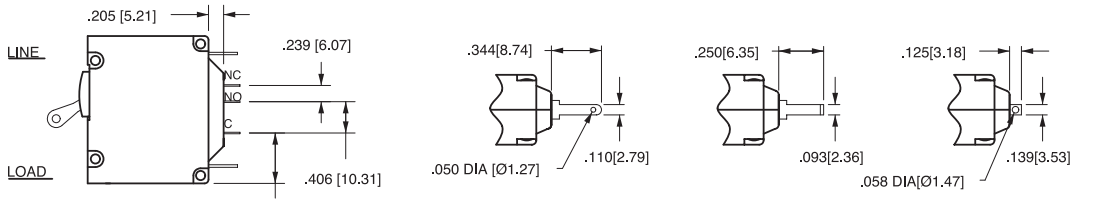

≤ 30 AMPS

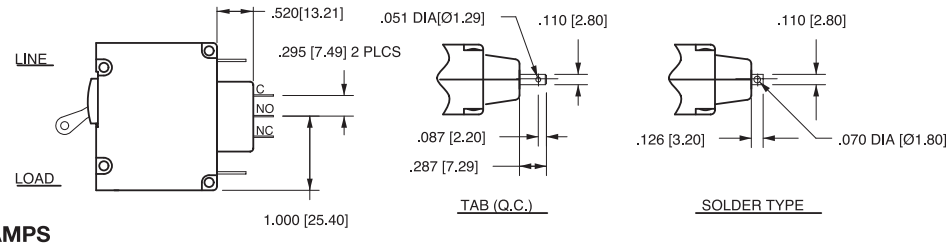

> 30 AMPS

Notes:
1 All dimensions are in inches [millimeters].
2 Tolerance ±.020 [.51] unless otherwise specified.
3 Alarm Switch available with .110 x .020 Q.C. & Solder Lug Terminals Only.

HANDLE POSITION VS. AUX/ALARM SWITCH MODE

CIRCUIT BREAKER MODE	STANDARD C/B HANDLE POSITION	STANDARD C/B AUX. SWITCH MODE	MID TRIP C/B HANDLE POSITION	MID TRIP C/B ALARM SWITCH MODE	MID TRIP C/B HANDLE POSITION	MID TRIP C/B AUX. SWITCH MODE (w/o ALARM SWITCH)
OFF	30° OFF O	NC NO C	30° OFF O	NC NO C	30° OFF O	NC NO C
ON	ON I 30°	NC NO C	ON I 30°	NC NO C	ON I 30°	NC NO C
ELECTRICAL TRIP	30° OFF O	NC NO C	MID TRIP 90°	NC NO C	MID TRIP 90°	NC NO C

TERMINAL DIMENSIONAL DETAIL & RATING

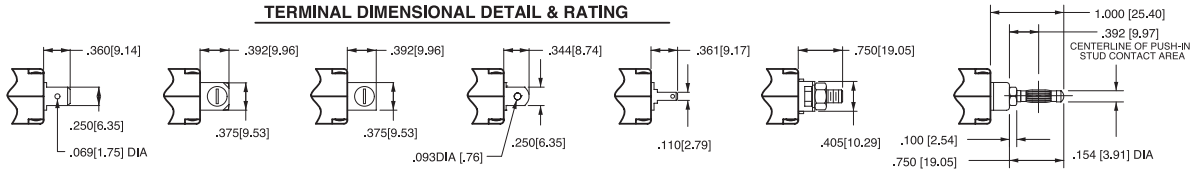

TAB (Q.C.)	UPTURN LUG	BUS	QC SOLDER LUG	.110 QC	M6 STUD	PUSH-IN STUD
30 AMP	#8-32 30 AMP #10-32 30 AMP M5 30 AMP M4 30 AMP	#8-32 30 AMP #10-32 50 AMP	30 AMP	VOLTAGE COILS ONLY	50 AMP	50 AMP

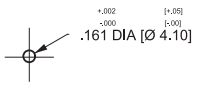

PUSH-IN STUD MATING HOLE

TABLE A
TIGHTENING TORQUE SPECIFICATIONS

THREAD SIZE	TORQUE
#6-32 & M3 MOUNTING HARDWARE	7-9 IN-LBS [0.8-1.0 NM]
#8-32 & M4 THREAD TERMINAL SCREW	12-15 IN-LBS [1.4-1.7 NM]
#10-32 & M5 THREAD TERMINAL SCREW	15-20 IN-LBS [1.7-2.3 NM]

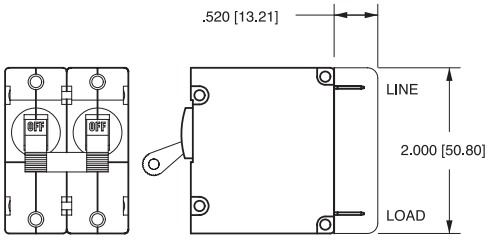

BARRIER FOR UL-RECOGNIZED MULTI-POLE BREAKERS

TABLE B

TERMINAL DESCRIPTION		DEPTH BEHIND PANEL
MAIN	TAB (Q.C.)	2.000 [50.80]
	SCREW TYPE	2.032 [51.60]
SHUNT, RELAY & DUAL COIL	TAB (Q.C.)	2.207 [56.10]
	SCREW #8-32 W/UPTURNED LUGS	2.364 [60.05]
AUX. SWITCH*	.093 TAB (Q.C.)	2.095 [53.20]
	.110 TAB (Q.C.)	2.189 [55.60]
	SOLDER TYPE	1.970 [50.00]

* AVAILABLE ON SERIES TRIP AND SWITCH ONLY CIRCUITS. WHEN CALLED FOR ON MULTI-POLE UNITS, ONLY ONE AUX. SWITCH IS NORMALLY SUPPLIED, AS SHOWN IN MULTI-POLE IDENTIFICATION SCHEME.

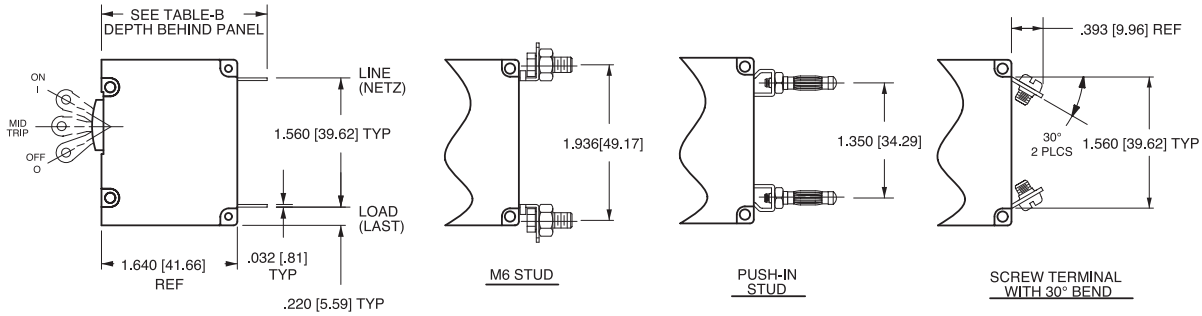

Notes:
1 All dimensions are in inches [millimeters].
2 Tolerance ±.020 [.51] unless otherwise specified.
3 Alarm Switch available with .110 x .020 QC & solder lug terminals only.

1-POLE (AA1)

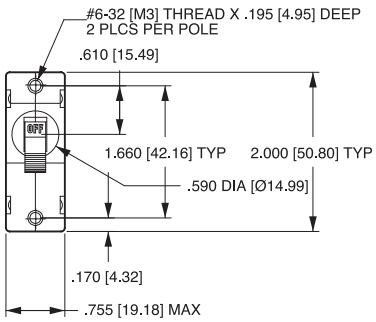

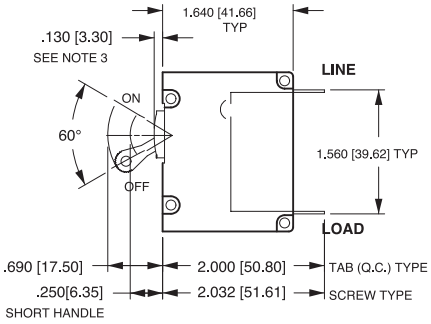

TAB (Q.C.) TYPE TERMINALS IN SERIES TRIP CIRCUIT CONFIGURATION SHOWN. FOR OTHER CONFIGURATIONS, SEE CIRCUIT AND TERMINAL DIAGRAMS.

2-POLE (AA2)

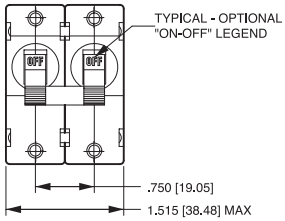

2-POLE (AB2)

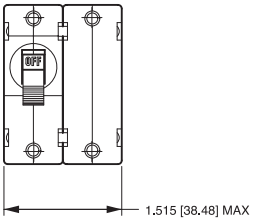

3-POLE (AA3)

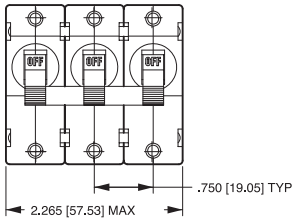

3-POLE (AB3)

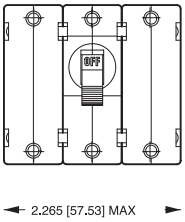

4-POLE (AA4)

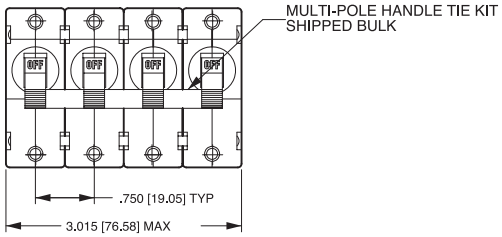

4-POLE (AB4)

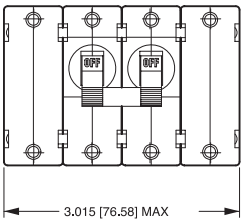

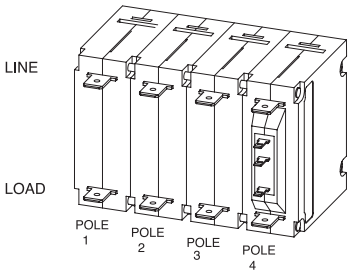

MULTI-POLE IDENTIFICATION SCHEME
AS VIEWED FROM TERMINAL END OF BREAKER.

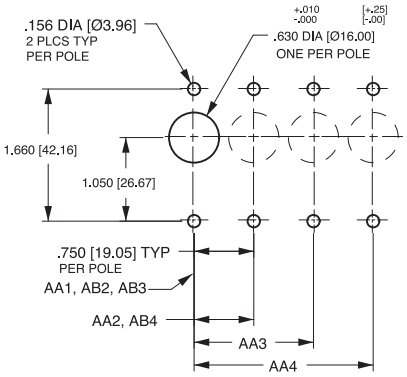

PANEL CUTOUT DETAIL

TOLERANCES ±.005 [±.12]
UNLESS OTHERWISE SPECIFIED

Notes:
1 All dimensions are in inches [millimeters].
2 Tolerance ± 0.20 [.51] unless otherwise specified.
3 For agency code P = .150 [3.81].

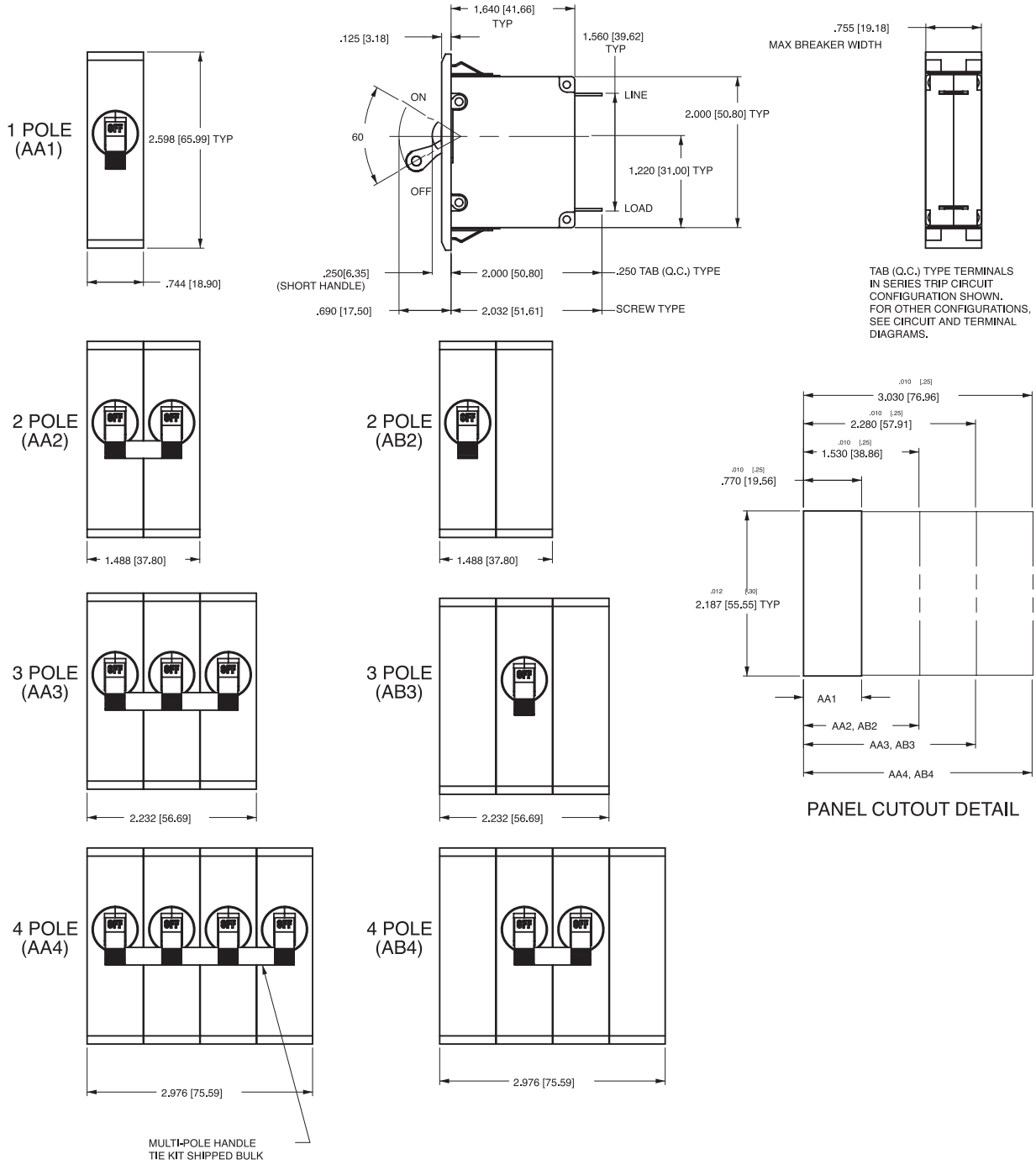

Notes:

1 All dimensions are in inches [millimeters].
2 Recommended panel thickness: .040 [1.02] to .100 [2.54].
3 Tolerance ±.020 [.51] unless otherwise specified.

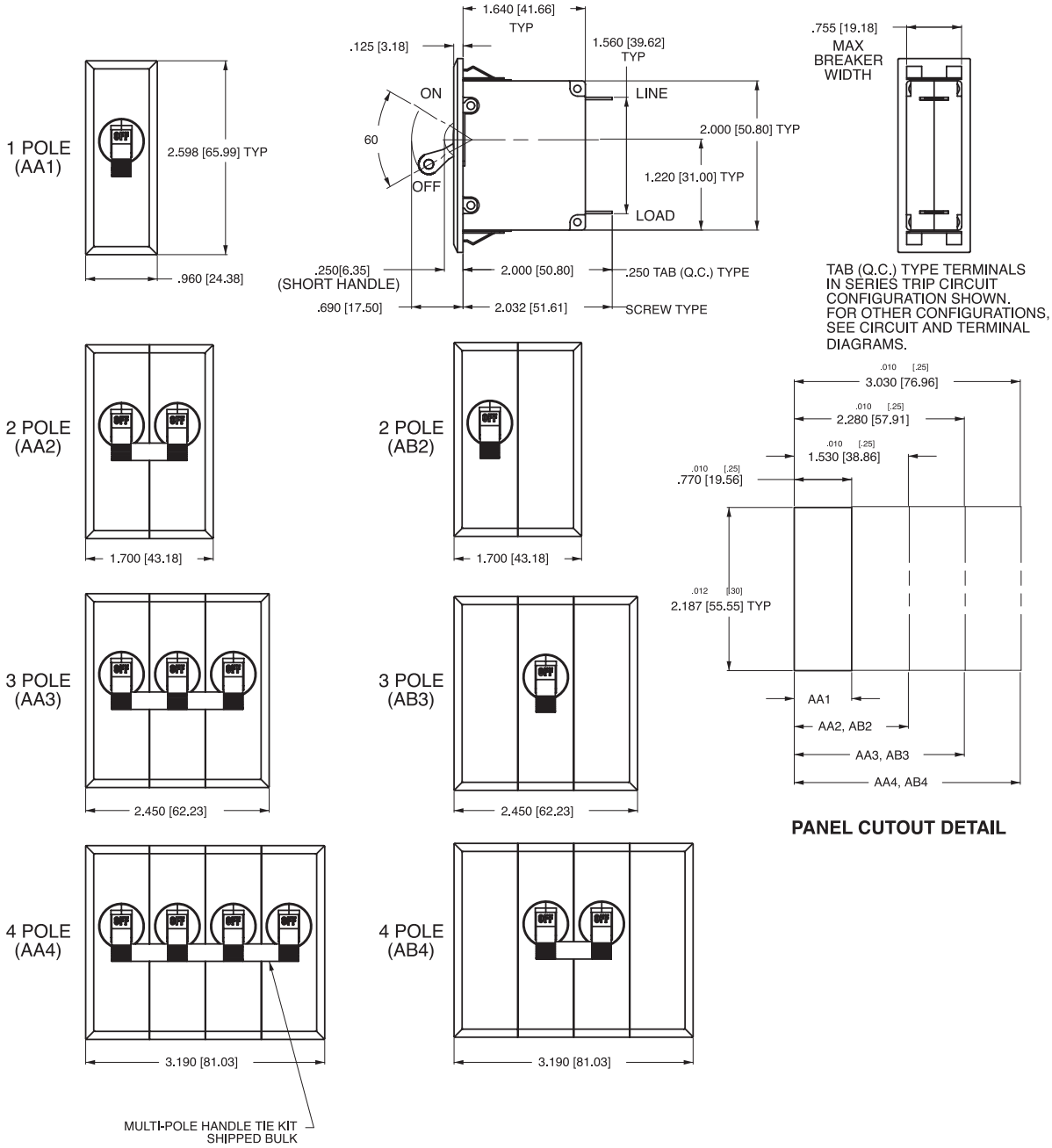

Notes:

1 All dimensions are in inches [millimeters].
2 Recommended panel thickness: .040 [1.02] to .100 [2.54].
3 Tolerance ±.020 [.51] unless otherwise specified.

A	M	1	–	B	0	–	10	–	450	–	1	0	1	–	C
1 Series	2 Actuator	3 Poles		4 Circuit	5 Aux/Alarm Switch		6 Frequency & Delay		7 Current Rating		8 Terminal	9 Actuator Color	10 Mounting/ Barriers		11 Agency Approval

1 SERIES
A

2 ACTUATOR[1]
M Sealed Toggle, one per unit

3 POLES
1 One
2 Two
3 Three

4 CIRCUIT
A[2] Switch Only (No Coil)
B Series Trip (Current)
C Series Trip (Voltage)
D[3] Shunt Trip (Current)
E[3] Shunt Trip (Voltage)
F[3] Relay Trip (Current)
G[3] Relay Trip (Voltage)
H[3,4] Dual Coil with Shunt Trip Voltage Coil
K[3,4] Dual Coil with Relay Trip Voltage Coil

5 AUXILIARY/ALARM SWITCH[5]
0 w/o Aux Switch
1 S.P.D.T., 0.093 Q.C. Term.
2 S.P.D.T., 0.110 Q.C. Term.
3 S.P.D.T., 0.139 Solder Lug
4 S.P.D.T., 0.110 Q.C. Term. (Gold Contacts)
5 S.P.S.T., 0.093 Q.C. Term. (Gold Contacts)
6 S.P.S.T., 0.139 Solder Lug
7 S.P.S.T., 0.110 Q.C. Term. (Gold Contacts)
8 S.P.S.T., 0.187 Q.C. Term.
9 S.P.D.T., 0.187 Q.C. Term.

6 FREQUENCY & DELAY
03 DC 50/60Hz, Switch Only
10 DC Instantaneous
11 DC Ultra Short
12 DC Short
14 DC Medium
16 DC Long
20 50/60Hz Instantaneous
21 50/60Hz Ultra Short
22 50/60Hz Short
24 50/60Hz Medium
26 50/60Hz Long
30 DC, 50/60Hz Instantaneous
31 DC, 50/60Hz Ultra Short
32 DC, 50/60Hz Short
34 DC, 50/60Hz Medium
36 DC, 50/60Hz Long
42[7] 50/60Hz Short, Hi-Inrush
44[7] 50/60Hz Medium, Hi-Inrush
46[7] 50/60Hz Long, Hi-Inrush
52[7] DC, Short,Hi-Inrush
54[7] DC, Medium, Hi-Inrush
56[7] DC, Long, Hi-Inrush

7 CURRENT RATING (AMPERES)

CODE	AMPERES						
020	0.020	**225**	0.250	**420**	2.000	**611**	11.000
025	0.025	**230**	0.300	**522**	2.250	**711**	11.500
030	0.030	**235**	0.350	**527**	2.750	**612**	12.000
035	0.035	**240**	0.400	**430**	3.000	**712**	12.500
040	0.040	**245**	0.450	**435**	3.500	**613**	13.000
045	0.045	**250**	0.500	**440**	4.000	**614**	14.000
050	0.050	**255**	0.550	**445**	4.500	**615**	15.000
055	0.055	**260**	0.600	**450**	5.000	**616**	16.000
060	0.060	**265**	0.650	**455**	5.500	**617**	17.000
065	0.065	**270**	0.700	**460**	6.000	**618**	18.000
070	0.070	**275**	0.750	**465**	6.500	**620**	20.000
075	0.075	**280**	0.800	**470**	7.000	**622**	22.000
080	0.080	**285**	0.850	**475**	7.500	**624**	24.000
085	0.085	**290**	0.900	**480**	8.000	**625**	25.000
090	0.090	**295**	0.950	**485**	8.500	**630**	30.000
095	0.095	**410**	1.000	**490**	9.000	**635**[8]	35.000
210	0.100	**512**	1.250	**495**	9.500	**640**[8]	40.000
215	0.150	**415**	1.500	**610**	10.000	**645**[8]	45.000
220	0.200	**517**	1.750	**710**	10.500	**650**[8]	50.000

OR VOLTAGE COIL (NORMAL RATED VOLTAGE)[6]

CODE	AMPERES						
A06	6 DC	**A32**	32 DC	**J12**	12 AC	**J65**	65 AC
A12	12 DC	**A48**	48 DC	**J18**	18 AC	**K20**	120 AC
A18	18 DC	**A65**	65 DC	**J24**	24 AC	**L40**	240 AC
A24	24 DC	**J06**	6 AC	**J48**	48 AC		

8 TERMINAL[9]
1[10] Push-On 0.250 Tab (Q.C.)
2 Screw 8-32 w/upturned lugs
3[11] Screw 8-32 (Bus Type)
4 Screw 10-32 w/upturned lugs
5[11] Screw 10-32 (Bus Type)
6 Screw 8-32 w/upturned lugs and 30° bend
7 Screw 8-32 (Bus Type) and 30° bend
8 Screw 10-32 w/upturned lugs and 30° bend
9 Screw 10-32 (Bus Type) and 30° bend
B Screw M5 w/upturned lugs
C Screw M4 w/upturned lugs
E[11] Screw M4 (Bus Type)
F Screw M5 w/upturned lugs and 30° bend
G Screw M5 (Bus Type) and 30° bend
H[11] Screw M5 (Bus Type)
L[12] 0.250 Q.C./ Solder Lug
M[11] M6 Threaded Stud
Q[14] Push-In Stud
R Screw M4 w/upturned lugs and 30° bend
T[11] Screw M4 (Bus Type) and 30° bend
P[13] Printed Circuit Board Terminals
S[13] Push-On 0.110 Tab (Q.C.)

9 LEGEND PLATE
0 No legend plate

10 MOUNTING/BARRIERS

	MOUNTING STYLE	BARRIERS
1	Standard Hex Nut	no
A	Standard Hex Nut (multipole only)	yes

11 AGENCY APPROVAL
C UL Recognized & CSA Accepted
I UL Recognized, CSA Accepted, UL1500 Ignition Protected

Notes:
1 Actuator Code M: Handle location as viewed from front of panel:
2 pole - right pole 3 pole - center pole
2 Switch Only circuits, rated up to 50 amps and 3 poles. Only available when tied to a protected pole. For .02 to 30 amps, select Current Code 630. For 35 - 50 amps, select Current Code 650.
3 Available with terminal Codes 1, 2 and 3. Current Rating limited to 30 amps maximum.
4 Consult factory for available Dual Coil options, as special catalog number is required. With Shunt construction, Dual Coils will trip instantaneously on line voltage. Dual coils require 30VA minimum power to trip and are rated for intermittent duty only.
5 Auxiliary Switch available on Series Trip & Switch Only circuits, limited to 30 amps. On multi-pole breakers, one auxiliary switch is supplied, mounted in the extreme right pole.
6 Voltage coils not rated for continuous duty. Available only with delay codes 10 and 20.
7 Available with Circuit Codes B & D only. VDE Certified to 30 amps. UL Recognized, CSA Accepted & TUV Certified to 50 amps.
8 UL Recognition and CSA Certification available on one and two pole breakers.
9 Screw Terminals are recommended on ratings greater than 20 amps. Ratings over 30 amps are only available with Terminal Codes 5, 9, G, H, M and Q..
10 Terminal Code 1: UL Recognition and CSA Certification up to 30 amps, but not recommended over 20 amps.
11 Terminal Code L : available up to 30A.
12 Single pole breakers with Terminal Code P (Printed Circuit Board) are available up to 50 amps, with Circuit Codes A, B and C. Two pole breakers with Terminal Code P (Printed Circuit Board) are available up to 40 amps with Circuit Codes A, B and C.

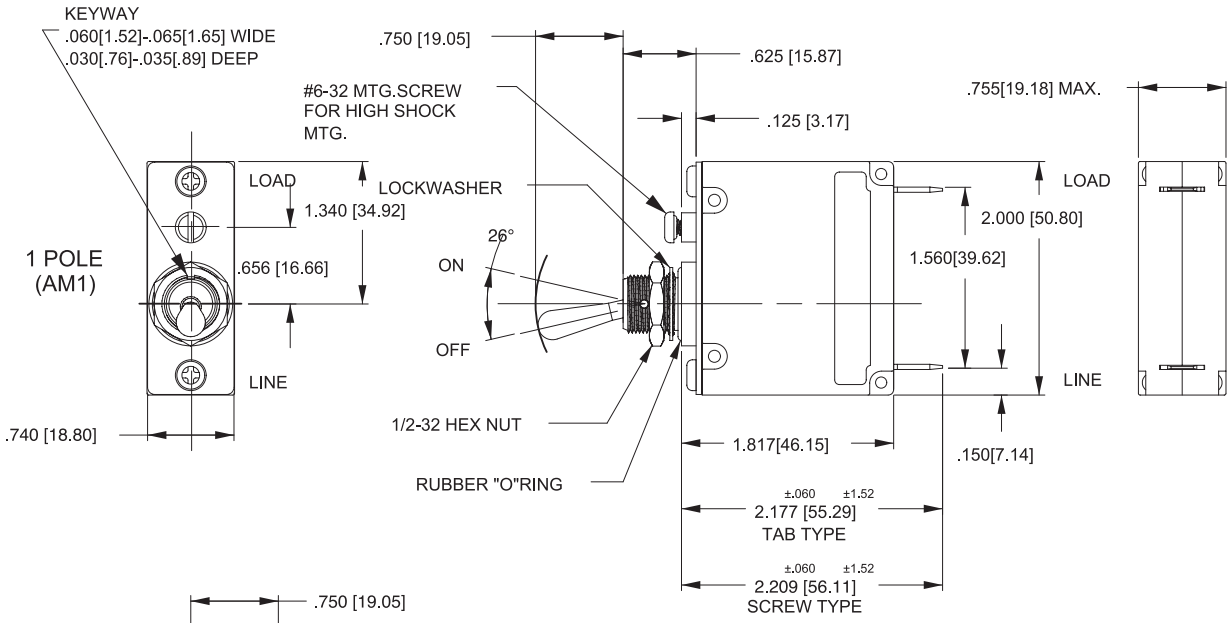

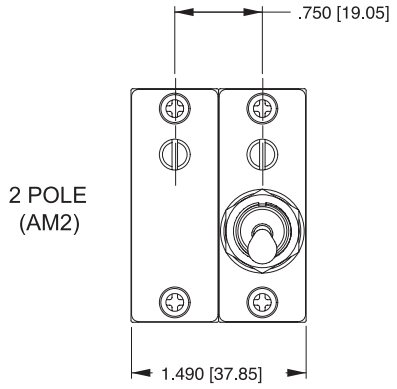

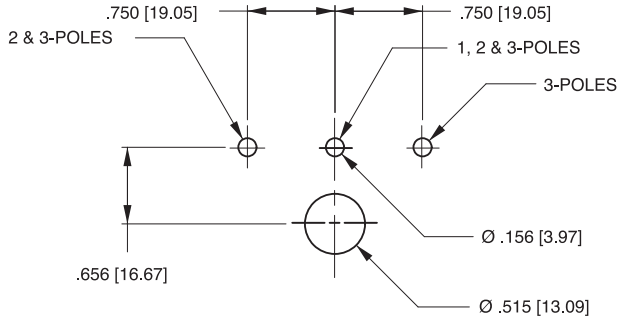

PANEL CUTOUT DETAIL
TOLERANCES ±.005[.13]

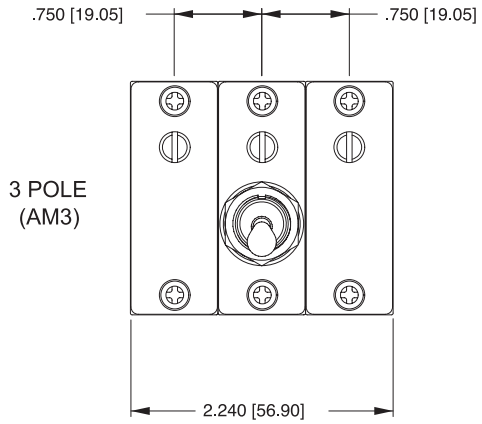

Notes:
1 All dimensions are in inches [millimeters].
2 Tolerance ±.020 [.51] unless otherwise specified.

A	F	1	–	B	0	–	24	–	630	–	2	3	1	–	D
1 Series	2 Actuator	3 Poles		4 Circuit	5 Aux/Alarm Switch		6 Frequency & Delay		7 Current Rating		8 Terminal	9 Actuator Color	10 Mounting/ Barriers		11 Agency Approval

1 SERIES
A

2 ACTUATOR[1]

Two Color Visi-Rocker

C	Indicate ON, vertical legend
D	Indicate ON, horizontal legend
E	Indicate ON, no legend
F	Indicate OFF, vertical legend
G	Indicate OFF, horizontal legend
H	Indicate OFF, no legend

Push-To-Reset, Visi-Rocker

N	Indicate OFF, vertical legend
O	Indicate OFF, horizontal legend
P	Indicate OFF, no legend

Single color

J	Vertical legend
K	Horizontal legend
L	No legend

Push-To-Reset , Single color

R	Vertical legend
U	Horizontal legend
V	No legend

ROCKER STYLE DESCRIPTIONS

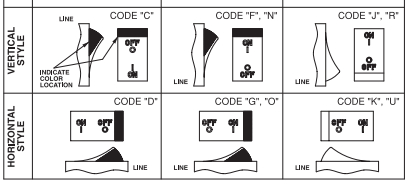

3 POLES

1	One	**2**	Two	**3**	Three

4 CIRCUIT

A[3]	Switch Only (No Coil)	**F**[4]	Relay Trip (Current)
B	Series Trip (Current)	**G**[4]	Relay Trip (Voltage)
C	Series Trip (Voltage)	**H**[4,5]	Dual Coil with Shunt Trip Voltage Coil
D[4]	Shunt Trip (Current)	**K**[4,5]	Dual Coil with Relay Trip Voltage Coil
E[4]	Shunt Trip (Voltage)		

5 AUXILIARY/ALARM SWITCH[6,7]

0	w/o Aux Switch	**5**	S.P.S.T., 0.093 Q.C. Term. (Gold Contacts)
1	S.P.D.T., 0.093 Q.C. Term.	**6**	S.P.S.T., 0.139 Solder Lug
2	S.P.D.T., 0.110 Q.C. Term.	**7**	S.P.S.T., 0.110 Q.C. Term. (Gold Contacts)
3	S.P.D.T., 0.139 Solder Lug	**8**	S.P.S.T., 0.187 Q.C. Term.
4	S.P.D.T., 0.110 Q.C. Term. (Gold Contacts)	**9**	S.P.D.T., 0.187 Q.C. Term.

6 FREQUENCY & DELAY

03	DC 50/60Hz, Switch Only	**30**	DC, 50/60Hz Instantaneous
10	DC Instantaneous	**31**	DC, 50/60Hz Ultra Short
11	DC Ultra Short	**32**	DC, 50/60Hz Short
12	DC Short	**34**	DC, 50/60Hz Medium
14	DC Medium	**36**	DC, 50/60Hz Long
16	DC Long	**42**[9]	50/60Hz Short, Hi-Inrush
20	50/60Hz Instantaneous	**44**[9]	50/60Hz Medium, Hi-Inrush
21	50/60Hz Ultra Short	**46**[9]	50/60Hz Long, Hi-Inrush
22	50/60Hz Short	**52**[9]	DC, Short,Hi-Inrush
24	50/60Hz Medium	**54**[9]	DC, Medium, Hi-Inrush
26	50/60Hz Long	**56**[9]	DC, Long, Hi-Inrush

7 CURRENT RATING (AMPERES)

CODE	AMPERES						
020	0.020	**225**	0.250	**420**	2.000	**611**	11.000
025	0.025	**230**	0.300	**522**	2.250	**711**	11.500
030	0.030	**235**	0.350	**527**	2.750	**612**	12.000
035	0.035	**240**	0.400	**430**	3.000	**712**	12.500
040	0.040	**245**	0.450	**435**	3.500	**613**	13.000
045	0.045	**250**	0.500	**440**	4.000	**614**	14.000
050	0.050	**255**	0.550	**445**	4.500	**615**	15.000
055	0.055	**260**	0.600	**450**	5.000	**616**	16.000
060	0.060	**265**	0.650	**455**	5.500	**617**	17.000
065	0.065	**270**	0.700	**460**	6.000	**618**	18.000
070	0.070	**275**	0.750	**465**	6.500	**620**	20.000
075	0.075	**280**	0.800	**470**	7.000	**622**	22.000
080	0.080	**285**	0.850	**475**	7.500	**624**	24.000
085	0.085	**290**	0.900	**480**	8.000	**625**	25.000
090	0.090	**295**	0.950	**485**	8.500	**630**	30.000
095	0.095	**410**	1.000	**490**	9.000	**635**[10]	35.000
210	0.100	**512**	1.250	**495**	9.500	**640**[10]	40.000
215	0.150	**415**	1.500	**610**	10.000	**645**[10]	45.000
220	0.200	**517**	1.750	**710**	10.500	**650**[10]	50.000

OR VOLTAGE COIL (NORMAL RATED VOLTAGE)[8]

A06	6 DC	**A32**	32 DC	**J12**	12 AC	**J65**	65 AC
A12	12 DC	**A48**	48 DC	**J18**	18 AC	**K20**	120 AC
A18	18 DC	**A65**	65 DC	**J24**	24 AC	**L40**	240 AC
A24	24 DC	**J06**	6 AC	**J48**	48 AC		

8 TERMINAL[11]

1[12]	Push-On 0.250 Tab (Q.C.)	**E**[13]	Screw M4 (Bus Type)
2	Screw 8-32 w/upturned lugs	**F**	Screw M5 w/upturned lugs and 30° bend
3[13]	Screw 8-32 (Bus Type)	**G**	Screw M5 (Bus Type) and 30° bend
4	Screw 10-32 w/upturned lugs	**H**[13]	Screw M5 (Bus Type)
5[13]	Screw 10-32 (Bus Type)	**L**[14]	0.250 Q.C./ Solder Lug
6	Screw 8-32 w/upturned lugs and 30° bend	**M**[13]	M6 Threaded Stud
7	Screw 8-32 (Bus Type) and 30° bend	**P**[15]	Printed Circuit BoardTerminals
8	Screw 10-32 w/upturned lugs and 30° bend	**Q**[16]	Push-In Stud
9	Screw 10-32 (Bus Type) and 30° bend	**R**	Screw M4 w/upturned lugs and 30° bend
B	Screw M5 w/upturned lugs	**S**[17]	Push-On 0.110 Tab (Q.C.)
C	Screw M4 w/upturned lugs	**T**	Screw M4 (Bus Type) and 30° bend

9 ACTUATOR COLOR & LEGEND

Actuator or Visi-Color[12]	Marking: I-O	ON-OFF	Dual[12]	Marking Color: Single Color	Visi-Rocker
White	**A**	**B**	**1**	Black	White
Black	**C**	**D**	**2**	White	n/a
Red	**F**	**G**	**3**	White	Red
Green	**H**	**J**	**4**	White	Green
Blue	**K**	**L**	**5**	White	Blue
Yellow	**M**	**N**	**6**	Black	Yellow
Gray	**P**	**Q**	**7**	Black	Gray
Orange	**R**	**S**	**8**	Black	Orange

10 MOUNTING/BARRIERS[20]

		BARRIERS
	STANDARD ROCKER BEZEL,Threaded Insert, 2 per pole	
1	6-32 x 0.195 inches	no
A	6-32 X 0.195 inches (multi-pole units only)	yes
2	ISO M3 x 5mm	no
B	ISO M3 x 5mm (multi-pole units only)	yes
	ROCKERGUARD & PUSH-TO-RESET BEZEL,Threaded Insert, 2 per pole	
3	6-32 x 0.195 inches	no
C	6-32 x 0.195 inches (multi-pole units only)	yes
4	ISO M3 x 5mm	no
D	ISO M3 x 5mm (multi-pole units only)	yes
	FRONT PANEL SNAP-IN BRACKET, 0.744" wide bezel	
8	without Rockerguard (single pole units only)	no
H	with Rockerguard (single pole units only)	no
	FRONT PANEL SNAP-IN BRACKET, 0.96" wide bezel	
9	without Rockerguard (single pole units only)	no
J	with Rockerguard (single pole units only)	no

11 AGENCY APPROVAL

C	UL Recognized & CSA Accepted
D	VDE Certified, UL Recognized & CSA Accepted
E	TUV Certified, UL Recognized & CSA Accepted
I	UL Rec. STD 1077, UL Rec. 1500 (ignition protected), & CSA Accepted

Notes:

1. Push-To-Reset actuators have OFF portion of rocker shrouded.
2. Multi-pole breakers have all breakers identical except when specifying Aux. switch and/or mixed poles, and have one rocker per breaker.
3. Switch Only circuits, rated up to 50 amps & 3 poles, are available only when tied to a protected pole (Circuit Code B, C, D or H.), For .02 to 30 amps, select Current Code 630. For 35 - 50 amps, select Current Code 650.
4. Available with terminal Codes 1, 2 and 3. Current Rating limited to 30 amps maximum.
5. Consult factory for Dual Coil options, as special catalog number is required. With Shunt construction, Dual Coils will trip instantaneously on line voltage. Dual coils require 30VA minimum power to trip and are rated for intermittent duty only.
6. Auxiliary Switch breakers with Series Trip & Switch Only circuits: ≤ 30A, are supplied with standard half shells. 30-50A are supplied with extended boat (B-Style) half shells.
7. On multi-pole breakers, one aux. switch is supplied, mounted in the extreme right pole.
8. Separate pole type voltage coils not rated for continuous duty. Available only with delay codes 10 and 20.
9. Available with Circuit Codes B & D only. VDE Certified to 30 amps. UL Recognized, CSA Accepted & TUV Certified to 50 amps.
10. Series Trip current ratings: VDE Certification available with single pole breakers with DC Delay only. UL Recognition & CSA Accepted available in one and two pole breakers.
11. Screw Terminals are recommended on ratings greater than 20 amps. Ratings over 30 amps are only available with Terminal Codes 5, 9, G, H, M and Q.
12. Terminal Code 1: VDE Certification up to 25 amps and UL Recognition and CSA Accepted up to 30 amps, but not recommended over 20 amps.
13. Terminal Codes 3, 5 E & H (Bus Type) with VDE, are supplied with Lock Washers; Terminal Code M (M6 Threaded Stud) with VDE is supplied with Lock and Flat Washers. These breakers are only VDE Certified when the washers are used.
14. VDE Cert. available up to 12 amps. UL Rec. & CSA Accepted available up to 30 amps.
15. Single pole breakers with Terminal Code P (Printed Circuit Board) are available up to 30 amps with VDE Certification and 50 amps with UL Recognition and CSA Accepted, with Circuit Codes A, B and C. Two pole breakers with Terminal Code P (Printed Circuit Board) are available up to 40 amps with UL Recognition and CSA Certification with Circuit Codes A, B and C.
16. Terminal Code Q not available with VDE.
17. Terminal Code S used on voltage coil circuit constructions only.
18. Color shown is visi and legend with remainder of rocker black.
19. Dual = ON-OFF/I-O legend with actuator. None = no legend on actuator
20. Legend on Push-to-reset bezel/shroud is white with single color actuator codes R, & U. Legend on Push-to-reset bezel/shroud matches Visi-color of rocker with actuator codes N & O. Rockerguard available with actuator codes C through L.

A	1	1	–	B	0	–	24	–	630	–	2	3	1	–	E
1 Series	2 Actuator	3 Poles		4 Circuit	5 Aux/Alarm Switch		6 Frequency & Delay		7 Current Rating		8 Terminal	9 Actuator Color	10 Mounting/ Barriers		11 Agency Approval

1 SERIES
A

2 ACTUATOR[1]
Two Color Visi-Rocker
- **1** Indicate OFF, vertical legend
- **2** Indicate OFF, horizontal legend

Single color
- **3** Vertical legend
- **4** Horizontal legend

Push-To-Reset, Visi-Rocker
- **5** Indicate OFF, vertical legend
- **6** Indicate OFF, horizontal legend

Push-To-Reset , Single color
- **7** Vertical legend
- **8** Horizontal legend

ROCKER STYLE DESCRIPTIONS

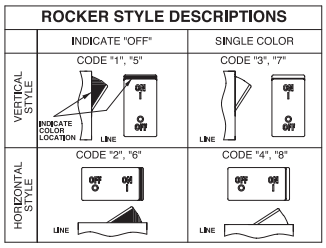

3 POLES[2]
1 One **2** Two **3** Three

4 CIRCUIT
- **A**[3] Switch Only (No Coil)
- **B** Series Trip (Current)
- **C** Series Trip (Voltage)
- **D**[4] Shunt Trip (Current)
- **E**[4] Shunt Trip (Voltage)
- **F**[4] Relay Trip (Current)
- **G**[4] Relay Trip (Voltage)
- **H**[4,5] Dual Coil with Shunt Trip Voltage Coil
- **K**[4,5] Dual Coil with Relay Trip Voltage Coil

5 AUXILIARY/ALARM SWITCH[6,7]
- **0** w/o Aux Switch
- **1** S.P.D.T., 0.093 Q.C. Term.
- **2** S.P.D.T., 0.110 Q.C. Term.
- **3** S.P.D.T., 0.139 Solder Lug
- **4** S.P.D.T., 0.110 Q.C. Term. (Gold Contacts)
- **5** S.P.S.T., 0.093 Q.C. Term. (Gold Contacts)
- **6** S.P.S.T., 0.139 Solder Lug
- **7** S.P.S.T., 0.110 Q.C. Term. (Gold Contacts)
- **8** S.P.S.T., 0.187 Q.C. Term.
- **9** S.P.D.T., 0.187 Q.C. Term.

6 FREQUENCY & DELAY
- **03** DC 50/60Hz, Switch Only
- **10**[6] DC Instantaneous
- **11** DC Ultra Short
- **12** DC Short
- **14** DC Medium
- **16** DC Long
- **20**[6] 50/60Hz Instantaneous
- **21** 50/60Hz Ultra Short
- **22** 50/60Hz Short
- **24** 50/60Hz Medium
- **26** 50/60Hz Long
- **30** DC, 50/60Hz Instantaneous
- **31** DC, 50/60Hz Ultra Short
- **32** DC, 50/60Hz Short
- **34** DC, 50/60Hz Medium
- **36** DC, 50/60Hz Long
- **42**[9] 50/60Hz Short, Hi-Inrush
- **44**[9] 50/60Hz Medium, Hi-Inrush
- **46**[9] 50/60Hz Long, Hi-Inrush
- **52**[9] DC, Short,Hi-Inrush
- **54**[9] DC, Medium, Hi-Inrush
- **56** DC, Long, Hi-Inrush

7 CURRENT RATING (AMPERES)

CODE	AMPERES	CODE	AMPERES	CODE	AMPERES	CODE	AMPERES
020	0.020	**225**	0.250	**420**	2.000	**611**	11.000
025	0.025	**230**	0.300	**522**	2.250	**711**	11.500
030	0.030	**235**	0.350	**527**	2.750	**612**	12.000
035	0.035	**240**	0.400	**430**	3.000	**712**	12.500
040	0.040	**245**	0.450	**435**	3.500	**613**	13.000
045	0.045	**250**	0.500	**440**	4.000	**614**	14.000
050	0.050	**255**	0.550	**445**	4.500	**615**	15.000
055	0.055	**260**	0.600	**450**	5.000	**616**	16.000
060	0.060	**265**	0.650	**455**	5.500	**617**	17.000
065	0.065	**270**	0.700	**460**	6.000	**618**	18.000
070	0.070	**275**	0.750	**465**	6.500	**620**	20.000
075	0.075	**280**	0.800	**470**	7.000	**622**	22.000
080	0.080	**285**	0.850	**475**	7.500	**624**	24.000
085	0.085	**290**	0.900	**480**	8.000	**625**	25.000
090	0.090	**295**	0.950	**485**	8.500	**630**	30.000
095	0.095	**410**	1.000	**490**	9.000	**635**[10]	35.000
210	0.100	**512**	1.250	**495**	9.500	**640**[10]	40.000
215	0.150	**415**	1.500	**610**	10.000	**645**[10]	45.000
220	0.200	**517**	1.750	**710**	10.500	**650**[10]	50.000

OR VOLTAGE COIL (NORMAL RATED VOLTAGE)[8]

A06	6 DC	**A32**	32 DC	**J12**	12 AC	**J65**	65 AC
A12	12 DC	**A48**	48 DC	**J18**	18 AC	**K20**	120 AC
A18	18 DC	**A65**	65 DC	**J24**	24 AC	**L40**	240 AC
A24	24 DC	**J06**	6 AC	**J48**	48 AC		

8 TERMINAL[11]
- **1**[12] Push-On 0.250 Tab (Q.C.)
- **2** Screw 8-32 w/upturned lugs
- **3**[13] Screw 8-32 (Bus Type)
- **4** Screw 10-32 w/upturned lugs
- **5**[13] Screw 10-32 (Bus Type)
- **6** Screw 8-32 w/upturned lugs and 30° bend
- **7** Screw 8-32 (Bus Type) and 30° bend
- **8** Screw 10-32 w/upturned lugs and 30° bend
- **9** Screw 10-32 (Bus Type) and 30° bend
- **B** Screw M5 w/upturned lugs
- **C** Screw M4 w/upturned lugs
- **E**[13] Screw M4 (Bus Type)
- **F** Screw M5 w/upturned lugs and 30° bend
- **G** Screw M5 (Bus Type) and 30° bend
- **H**[13] Screw M5 (Bus Type)
- **L**[14] 0.250 Q.C./ Solder Lug
- **M**[13] M6 Threaded Stud
- **P**[15] Printed Circuit BoardTerminals
- **Q** Push-In Stud
- **R** Screw M4 w/upturned lugs and 30° bend
- **S**[16] Push-On 0.110 Tab (Q.C.)
- **T** Screw M4 (Bus Type) and 30° bend

9 ACTUATOR COLOR & LEGEND

Actuator or Visi-Color[17]	Marking: I-O	Marking: ON-OFF	Marking: Dual[17]	Marking Color: Single Color	Marking Color: Visi-Rocker
White	**A**	**B**	**1**	Black	White
Black	**C**	**D**	**2**	White	n/a
Red	**F**	**G**	**3**	White	Red
Green	**H**	**J**	**4**	White	Green
Blue	**K**	**L**	**5**	White	Blue
Yellow	**M**	**N**	**6**	Black	Yellow
Gray	**P**	**Q**	**7**	Black	Gray
Orange	**R**	**S**	**8**	Black	Orange

10 MOUNTING/BARRIERS[18]

		BARRIERS
	STANDARD ROCKER BEZEL,Threaded Insert, 2 per pole FLAT ROCKER ACTUATOR	
1	6-32 x 0.195 inches	no
A	6-32 X 0.195 inches (multi-pole units only)	yes
2	ISO M3 x 5mm	no
B	ISO M3 x 5mm (multi-pole units only)	yes
	RECESSED OFF SIDE ROCKER ACTUATOR[19]	
5	6-32 x 0.195 inches	no
E	6-32 x 0.195 inches (multi-pole units only)	yes
6	ISO M3 x 5mm	no
F	ISO M3 x 5mm (multi-pole units only)	yes
	PUSH-TO-RESET BEZEL,Threaded Insert, 2 per pole	
3	6-32 x 0.195 inches	no
C	6-32 x 0.195 inches (multi-pole units only)	yes
4	ISO M3 x 5mm	no
D	ISO M3 x 5mm (multi-pole units only)	yes

11 AGENCY APPROVAL
- **C** UL Recognized & CSA Accepted
- **E** TUV Certified, UL Recognized & CSA Accepted
- **I** UL Rec. STD 1077, UL Rec. 1500 (ignition protected), & CSA Accepted

Notes:
1. Push-To-Reset actuators have OFF portion of rocker shrouded.
2. Multi-pole breakers have all breakers identical except when specifying Aux. switch and/or mixed poles, and have one rocker per breaker.
3. Switch Only circuits, rated up to 50 amps & 3 poles. Only available when tied to a protected pole. For .02 to 30 amps, select Current Code 630. For 35 - 50 amps, select Current Code 650.
4. Available with terminal Codes 1, 2 and 3. Current Rating limited to 30 amps maximum.
5. Consult factory for Dual Coil options, as special catalog number is required. With Shunt construction, Dual Coils will trip instantaneously on line voltage. Dual coils require 30VA minimum power to trip and are rated for intermittent duty only.
6. Auxiliary Switch breakers with Series Trip & Switch Only circuits: ≤ 30A, are supplied with standard half shells. 30-50A are supplied with extended boat (B-Style) half shells.
7. On multi-pole breakers, one aux. switch is supplied, mounted in the extreme right pole.
8. Separate pole type voltage coils not rated for continuous duty. Available only with delay codes 10 & 20.
9. Available with Circuit Codes B & D only. UL Recognized, CSA Accepted & TUV Certified to 50 amps.
10. UL Recognition, CSA Acceptance & TUV Certification available in one and two pole breakers.
11. Screw Terminals are recommended on ratings greater than 20 amps. Ratings over 30 amps are only available with Terminal Codes 5, 9, G, H, M and Q.
12. Terminal Code 1: Available up to 30 amps, but not recommended over 20 amps.
13. Terminal Codes 3, 5 E & H (Bus Type) with TUV, are supplied with Lock Washers; Terminal Code M (M6 Threaded Stud) with TUV is supplied with Lock and Flat Washers. These breakers are only TUV Certified when the washers are used.
14. TUV Cert. available up to 12 amps. UL Rec. & CSA Accepted available up to 30 amps.
15. Single pole breakers with Terminal Code P (Printed Circuit Board) are available up to 50 amps with UL Recognition, CSA Accepted & TUV Certification, with Circuit Codes A, B and C. Two pole breakers with Terminal Code P (Printed Circuit Board) are available up to 40 amps with UL Recognition and CSA Accepted with Circuit Codes A, B and C.
16. Terminal Code S used on voltage coil circuit constructions only.
17. Color shown is visi and legend with remainder of rocker black, Dual = ON-OFF/I-O legend.
18. Legend on Push-to-reset bezel/shroud is white with single color actuator codes 7 & 8. Legend on Push-To-Reset bezel/shroud matches Visi-Color of rocker with actuator codes 5 & 6.
19. Recessed "off-side" available with actuator codes 1, 2, 3 & 4. Legends on rocker are available in ink stamping only.

A	1	1	–	B	0	–	14	–	630	–	2	3	1	–	M	T
1 Series	2 Actuator	3 Poles		4 Circuit	5 Aux/Alarm Switch		6 Frequency & Delay		7 Current Rating		8 Terminal	9 Actuator Color	10 Mounting/ Barriers		11 Max. Appl. Rating	12 Agency Approval

1 SERIES
A

2 ACTUATOR[1]

Two Color Visi-Rocker
- **C** Indicate ON, vertical legend
- **D** Indicate ON, horizontal legend
- **F** Indicate OFF, vertical legend
- **G** Indicate OFF, horizontal legend

Single color
- **J** Vertical legend
- **K** Horizontal legend

Push-To-Reset, Visi-Rocker
- **N** Indicate OFF, vertical legend
- **O** Indicate OFF, horizontal legend

Push-To-Reset , Single color
- **R** Vertical legend
- **U** Horizontal legend

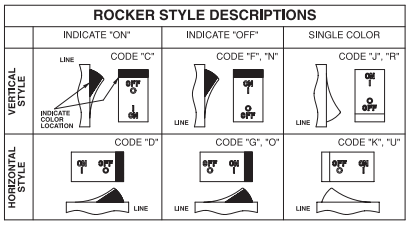

3 POLES[2]
- **1** One
- **2** Two
- **3** Three

4 CIRCUIT
- **B** Series Trip (Current)

5 AUXILIARY/ALARM SWITCH[3]
- **0** w/o Aux Switch
- **1** S.P.D.T., 0.093 Q.C. Term.
- **2** S.P.D.T., 0.110 Q.C. Term.
- **3** S.P.D.T., 0.139 Solder Lug
- **7** S.P.S.T., 0.110 Q.C. Term. (Gold Contacts)
- **8** S.P.S.T., 0.187 Q.C. Term.
- **9** S.P.D.T., 0.187 Q.C. Term.

6 FREQUENCY & DELAY
- **11** DC Ultra Short
- **12** DC Short
- **14** DC Medium
- **16** DC Long
- **52** DC, Short,Hi-Inrush
- **54** DC, Medium, Hi-Inrush
- **56** DC, Long, Hi-Inrush

7 CURRENT RATING (AMPERES)

CODE	AMPERES						
210	0.100	**285**	0.850	**455**	5.500	**613**	13.000
215	0.150	**290**	0.900	**460**	6.000	**614**	14.000
220	0.200	**295**	0.950	**465**	6.500	**615**	15.000
225	0.250	**410**	1.000	**470**	7.000	**616**	16.000
230	0.300	**512**	1.250	**475**	7.500	**617**	17.000
235	0.350	**415**	1.500	**480**	8.000	**618**	18.000
240	0.400	**517**	1.750	**485**	8.500	**620**	20.000
245	0.450	**420**	2.000	**490**	9.000	**622**	22.000
250	0.500	**522**	2.250	**495**	9.500	**624**	24.000
255	0.550	**527**	2.750	**610**	10.000	**625**	25.000
260	0.600	**430**	3.000	**710**	10.500	**630**	30.000
265	0.650	**435**	3.500	**611**	11.000	**635**[4]	35.000
270	0.700	**440**	4.000	**711**	11.500	**640**[4]	40.000
275	0.750	**445**	4.500	**612**	12.000	**645**[4]	45.000
280	0.800	**450**	5.000	**712**	12.500	**650**[4]	50.000

8 TERMINAL[5]
- **1**[7] Push-On 0.250 Tab (Q.C.)
- **2** Screw 8-32 w/upturned lugs
- **3**[8] Screw 8-32 (Bus Type)
- **4** Screw 10-32 w/upturned lugs
- **5**[8] Screw 10-32 (Bus Type)
- **6** Screw 8-32 w/upturned lugs and 30° bend
- **7** Screw 8-32 (Bus Type) and 30° bend
- **8** Screw 10-32 w/upturned lugs and 30° bend
- **9** Screw 10-32 (Bus Type) and 30° bend
- **B** Screw M5 w/upturned lugs
- **F** Screw M5 w/upturned lugs and 30° bend
- **G** Screw M5 (Bus Type) and 30° bend
- **H**[8] Screw M5 (Bus Type)
- **M**[8] M6 Threaded Stud
- **P**[9] Printed Circuit Board Terminals
- **Q**[10] Push-In Stud

9 ACTUATOR COLOR & LEGEND

Actuator or Visi-Color[11]	Marking: ON-OFF	Marking: Dual[11]	Marking Color: Single Color	Marking Color: Visi-Rocker
White	**B**	**1**	Black	White
Black	**D**	**2**	White	n/a
Red	**G**	**3**	White	Red
Green	**J**	**4**	White	Green
Blue	**L**	**5**	White	Blue
Yellow	**N**	**6**	Black	Yellow
Gray	**Q**	**7**	Black	Gray
Orange	**S**	**8**	Black	Orange

10 MOUNTING/BARRIERS[12]

	STANDARD ROCKER BEZEL,Threaded Insert, 2 per pole FLAT ROCKER ACTUATOR	BARRIERS
1	6-32 x 0.195 inches	no
A	6-32 X 0.195 inches (multi-pole units only)	yes
2	ISO M3 x 5mm	no
B	ISO M3 x 5mm (multi-pole units only)	yes
	RECESSED OFF SIDE ROCKER ACTUATOR 13	
5	6-32 x 0.195 inches	no
E	6-32 x 0.195 inches (multi-pole units only)	yes
6	ISO M3 x 5mm	no
F	ISO M3 x 5mm (multi-pole units only)	yes
	PUSH-TO-RESET BEZEL,Threaded Insert, 2 per pole	
3	6-32 x 0.195 inches	no
C	6-32 x 0.195 inches (multi-pole units only)	yes
4	ISO M3 x 5mm	no
D	ISO M3 x 5mm (multi-pole units only)	yes

11 MAXIMUM APPLICATION RATING
- **M** 80 DC

12 AGENCY APPROVAL
- **T** UL489A LISTED
- **J** UL489A LISTED, TUV CERTIFIED

Notes:
1. Push-To-Reset actuators have OFF portion of rocker shrouded.
2. Multi-pole breakers have all breakers identical except when specifying Aux. switch and/or mixed poles, and have one rocker per breaker.
3. Auxiliary Switch breakers with Series Trip circuits: ≤ 30A, are supplied with standard half shells. 30-50A are supplied with extended boat (B-Style) half shells.
4. VDE Certification available with single pole breakers only. UL489A Listing available with one and two pole breakers.
5. Screw Terminals are recommended on ratings greater than 20 amps. Ratings over 30 amps are only available with Terminal Codes 5, 9, G, H, M and Q.
6. Terminal Code 1 (Push-On) available up to 25 amps with TUV or VDE Certification and 30 amps with UL489A Listing, but is not recommended over 20 amps.
7. Terminal Codes 3, 5 and H (Bus Type) with TUV or VDE, are supplied with Lock Washers, and Terminal Code M (M6 Threaded Stud) with VDE is supplied with Lock and Flat Washers. These breakers are only TUV or VDE Certified when the washers are used.
8. Single pole breakers with Terminal Code P (Printed Circuit Board) are available up to 30 amps with VDE Certification and 50 amps with UL489A Listing.
9. Terminal Code Q not available with VDE certification.
10. Color shown is Visi and Legend with remainder of rocker black. Dual = ON-OFF/I-O legend.
11. Legend on Push-to-reset bezel/shroud is white with single color actuator codes R & U. Legend on Push-To-Reset bezel/shroud matches Visi-Color of rocker with actuator codes N & O. Rockerguard available with actuator codes C through K

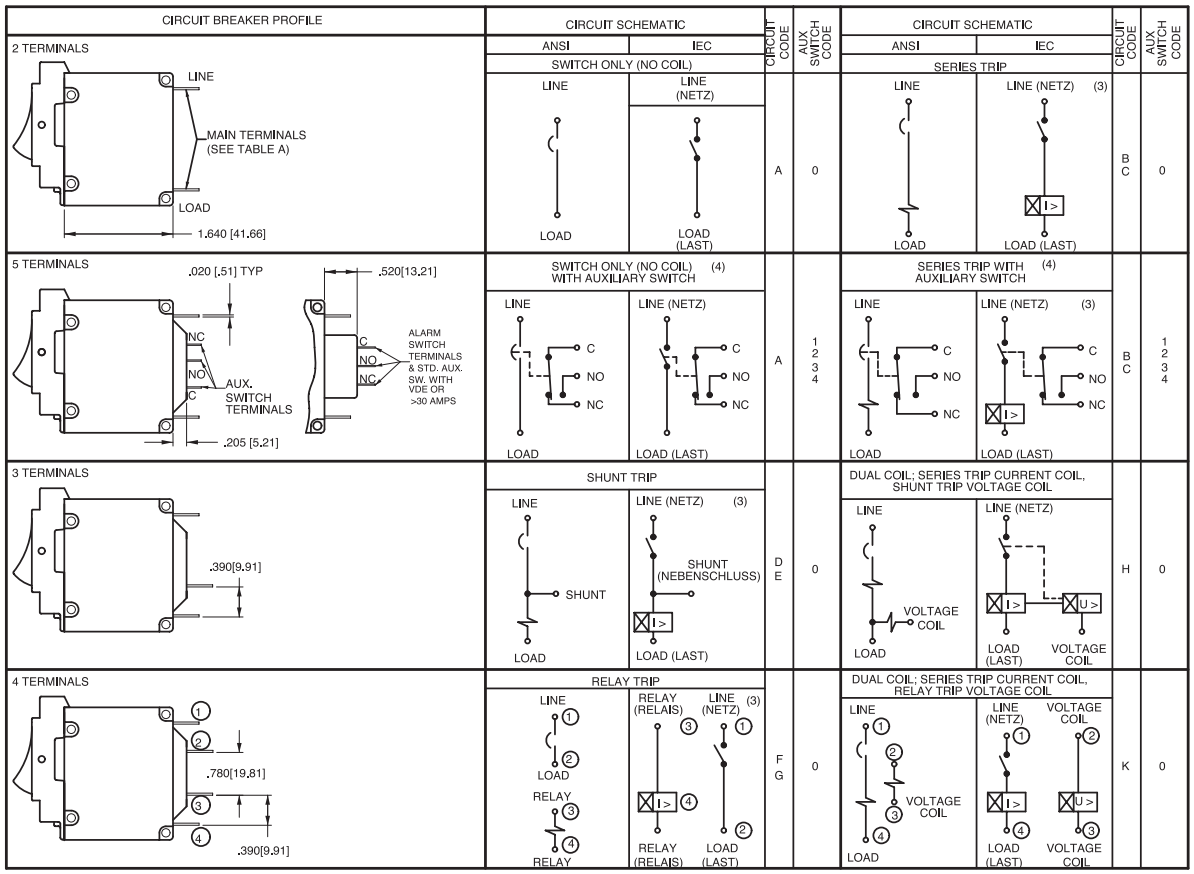

TABLE B		
TERMINAL DESCRIPTION		DEPTH BEHIND PANEL
MAIN	TAB (Q.C.)	2.370 [60.20]
	SCREW TYPE	2.402 [61.01]
SHUNT, RELAY & DUAL COIL	TAB (Q.C.)	2.577 [65.46]
	SCREW #8-32 W/UPTURNED LUGS	2.734 [69.44]
AUX. SWITCH*	.093 TAB (Q.C.)	2.465 [62.61]
	.110 TAB (Q.C.)	2.559 [65.00]
	SOLDER TYPE	2.340 [59.44]

* AVAILABLE ON SERIES TRIP AND SWITCH ONLY CIRCUITS. WHEN CALLED FOR ON MULTI-POLE UNITS, ONLY ONE AUX. SWITCH IS NORMALLY SUPPLIED, AS VIEWED IN MULTI-POLE IDENTIFICATION SCHEME.

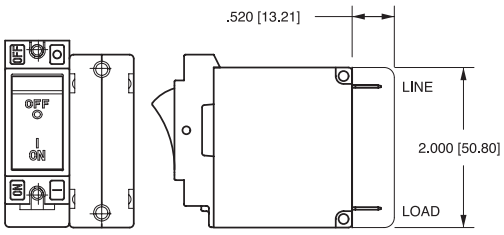

BARRIER FOR UL-RECOGNIZED MULTI-POLE BREAKERS

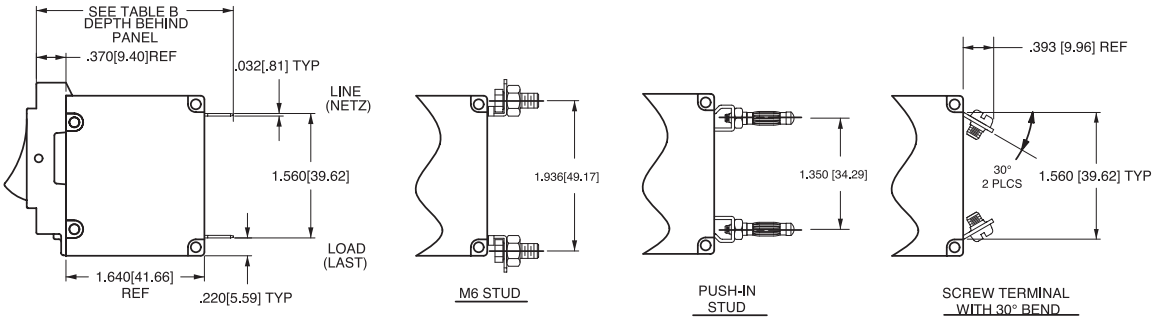

Notes:
1 All dimensions are in inches [millimeters].
2 Tolerance ±.020 [.51] unless otherwise specified.
3 Schematic shown represents current trip circuit.
4 Circuits shown for >30 amps / VDE.

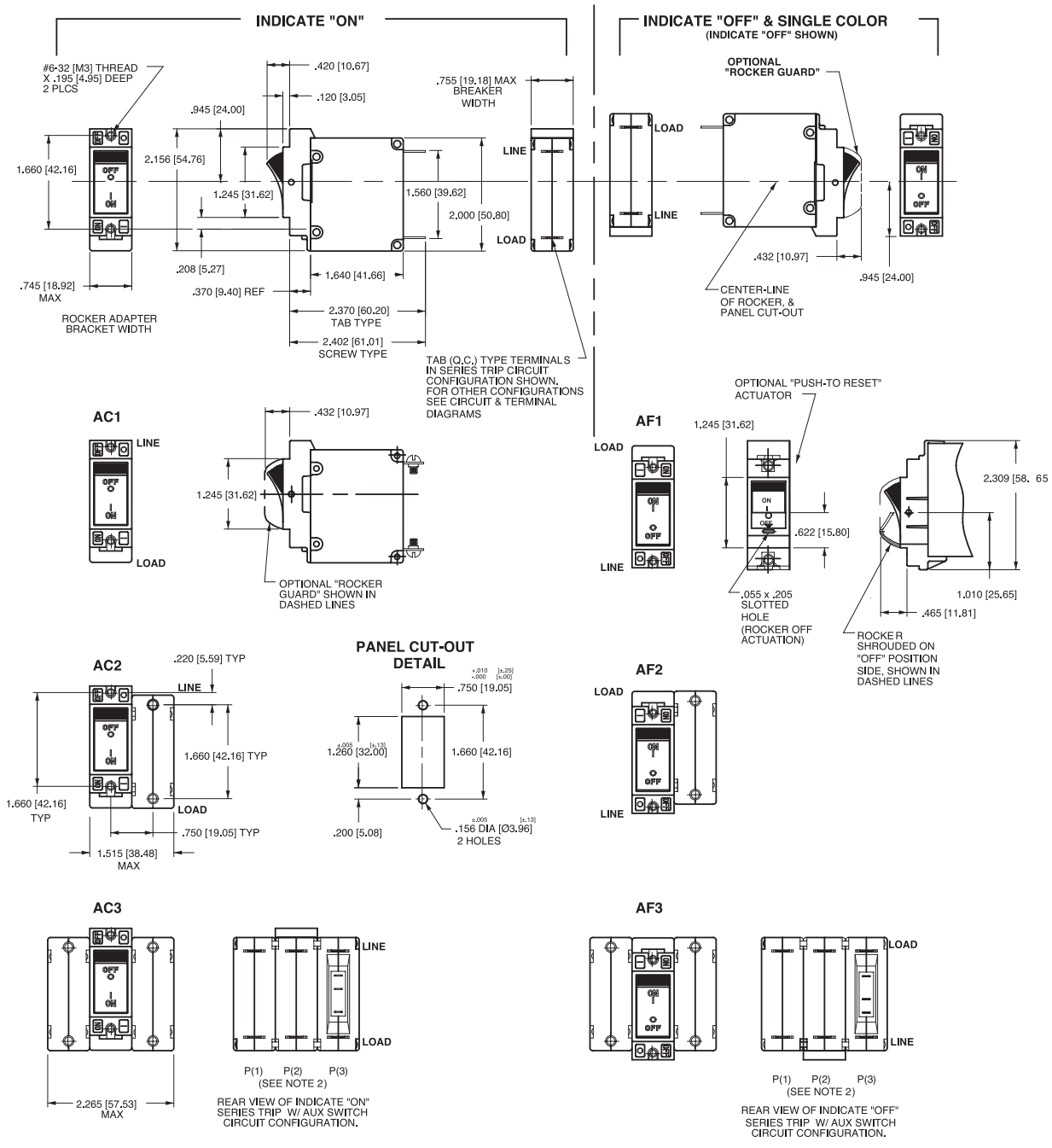

Notes:

1 Dimensions apply to all variations shown. Notice that circuit breaker line & load terminal orientation on indicate OFF is opposite of indicate ON.
2 For pole orientation with horizontal legend, rotate front view clockwise 90°.
3 All dimensions are in inches [millimeters].
4 Tolerance ± 0.20 [.51] unless otherwise specified.

INDICATE "ON"

FRONT PANEL SNAP-IN BRACKET, 0.96" [24.48 mm] wide bezel

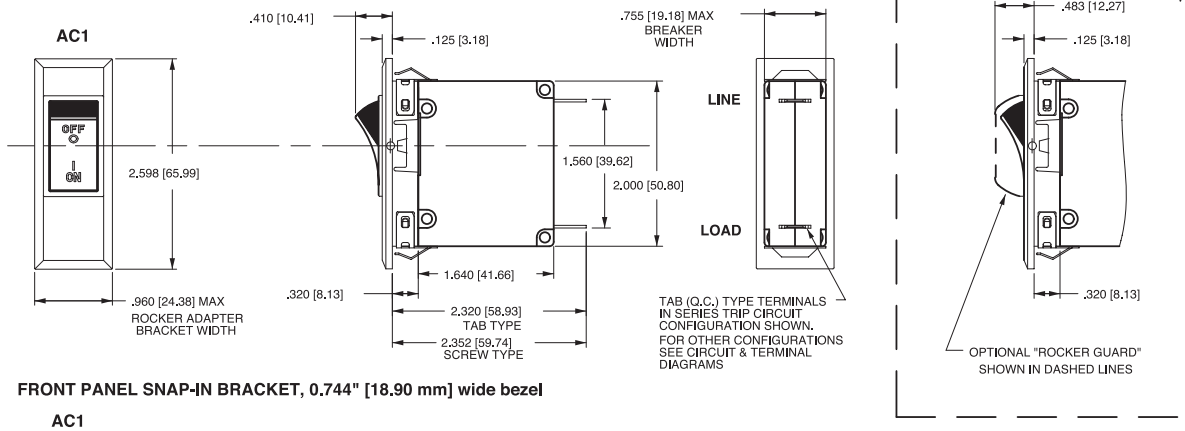

FRONT PANEL SNAP-IN BRACKET, 0.744" [18.90 mm] wide bezel

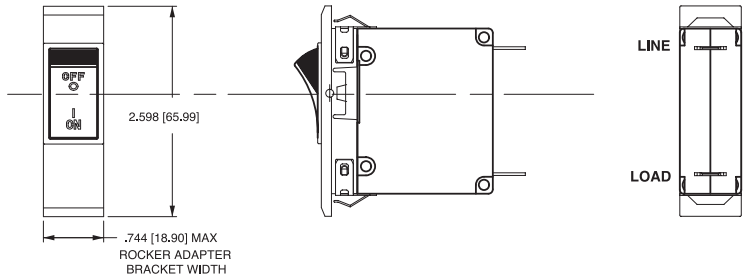

INDICATE "OFF"

FRONT PANEL SNAP-IN BRACKET, 0.96" [24.48 mm] wide bezel

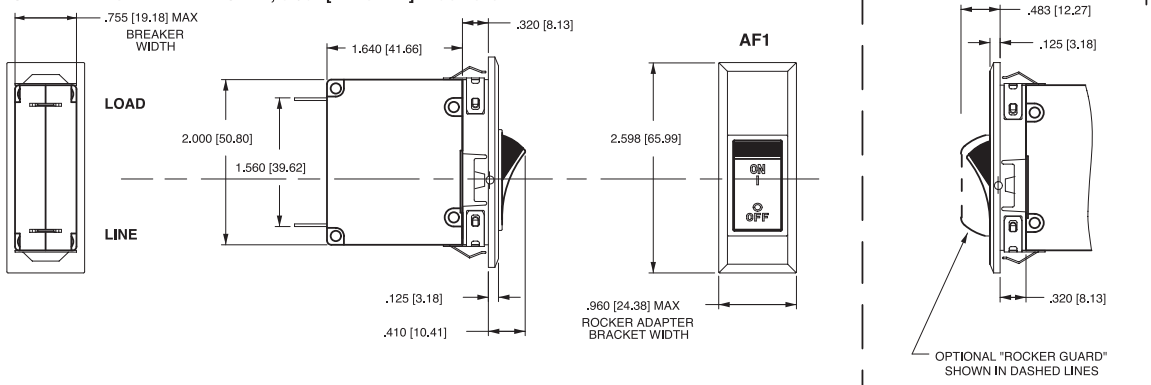

FRONT PANEL SNAP-IN BRACKET, 0.744" [18.90 mm] wide bezel

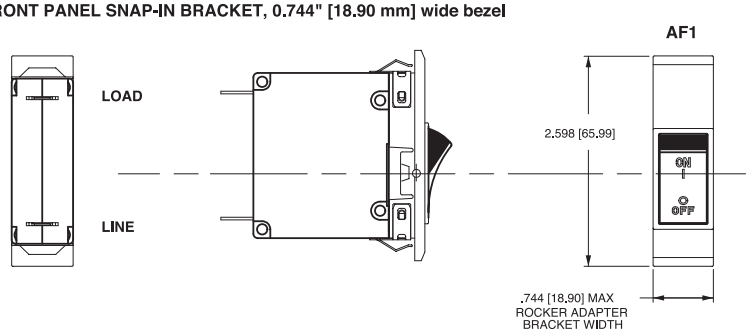

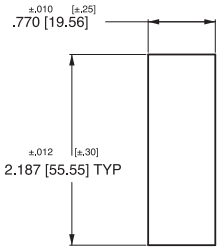

PANEL CUTOUT DETAIL

Notes:

1. Dimensions apply to all variations shown. Notice that circuit breaker line & load terminal
2. For pole orientation with horizontal legend, rotate front view clockwise 90°. Orientation on indicate "OFF" is opposite of indicate "ON"
3. Recommended panel thickness: .04 0 [1.02] to .100 [2.54]
4. All dimensions are in Inches [millimeters].
5. Tolerance ±.020 [.51] unless otherwise specified.

INDICATE "OFF" & SINGLE COLOR

(INDICATE "OFF" SHOWN)

A11

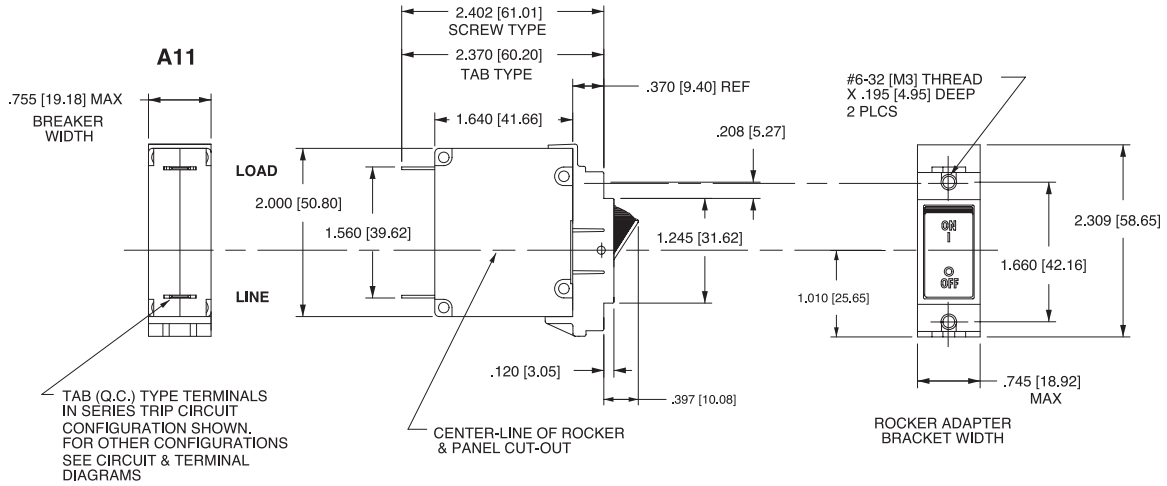

A12

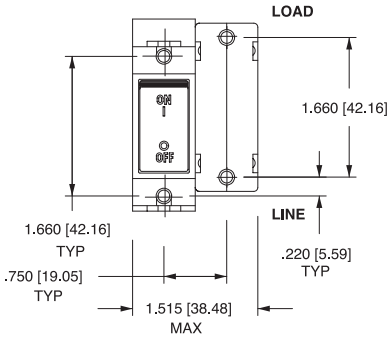

PANEL CUT-OUT DETAIL

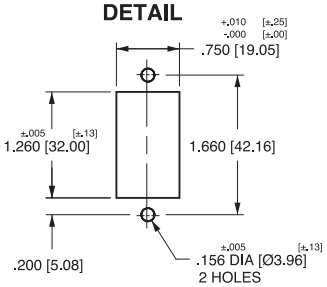

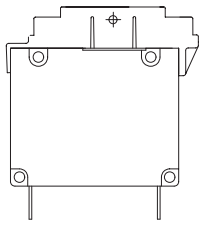

SIDE VIEW OF BREAKER IN THE "ON" POSITION

A13

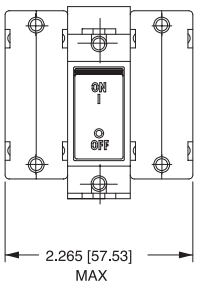

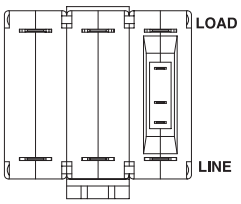

(SEE NOTE 2)

REAR VIEW OF INDICATE "OFF" SERIES TRIP W/ AUX SWITCH CIRCUIT CONFIGURATION.

PUSH-TO-RESET ACTUATOR

A51

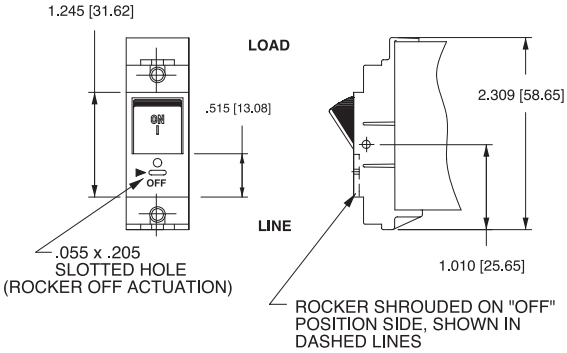

ACTUATOR SIDE VIEW

(SURFACE CONTOURS)

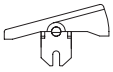

FLAT ROCKER

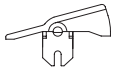

RECESSED OFF SIDE ROCKER

Notes:

1 All dimensions are in inches [millimeters].
2 For pole orientation with horizontal legend, rotate front view clockwise 90°.
3 Tolerance ± 0.20 [.51] unless otherwise specified.

A-SERIES ROCKER

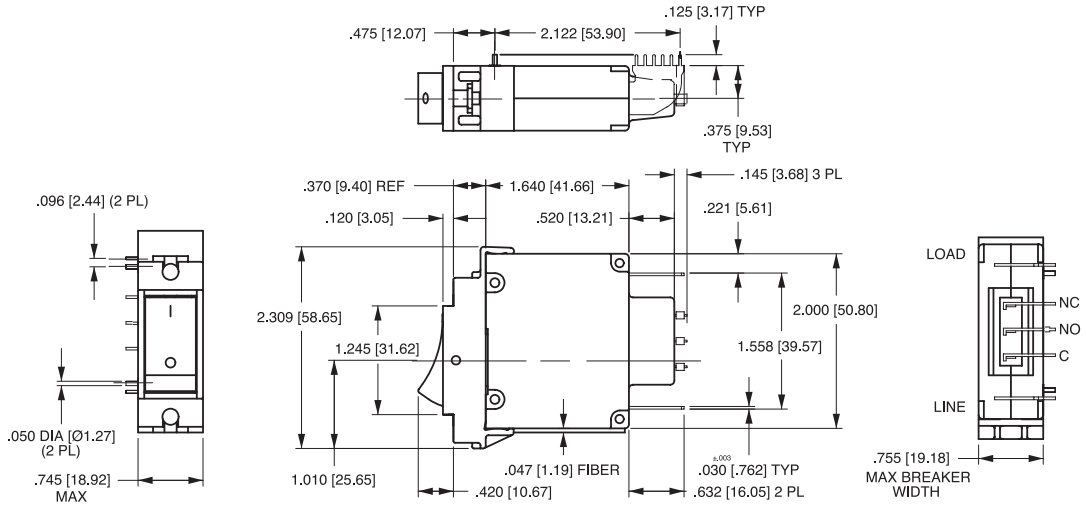

A-SERIES HANDLE

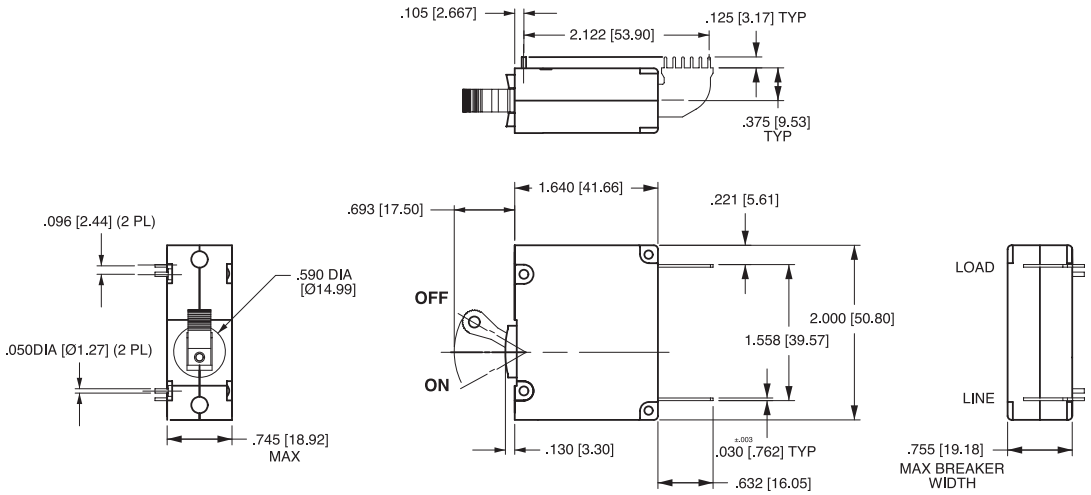

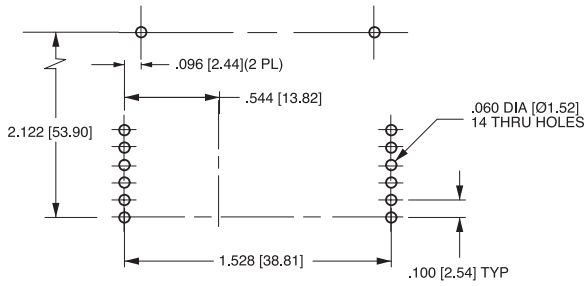

P.C. FOOT PRINT

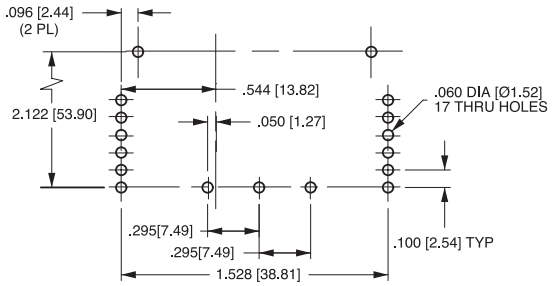

P.C. FOOT PRINT WITH AUX. SWITCH

Notes:
1 Drawing illustrates A-Series with VDE certification.
2 All dimensions are in inches [millimeters].
3 Tolerance ± 0.20 [.51] unless otherwise specified

REV_CB_A_0712